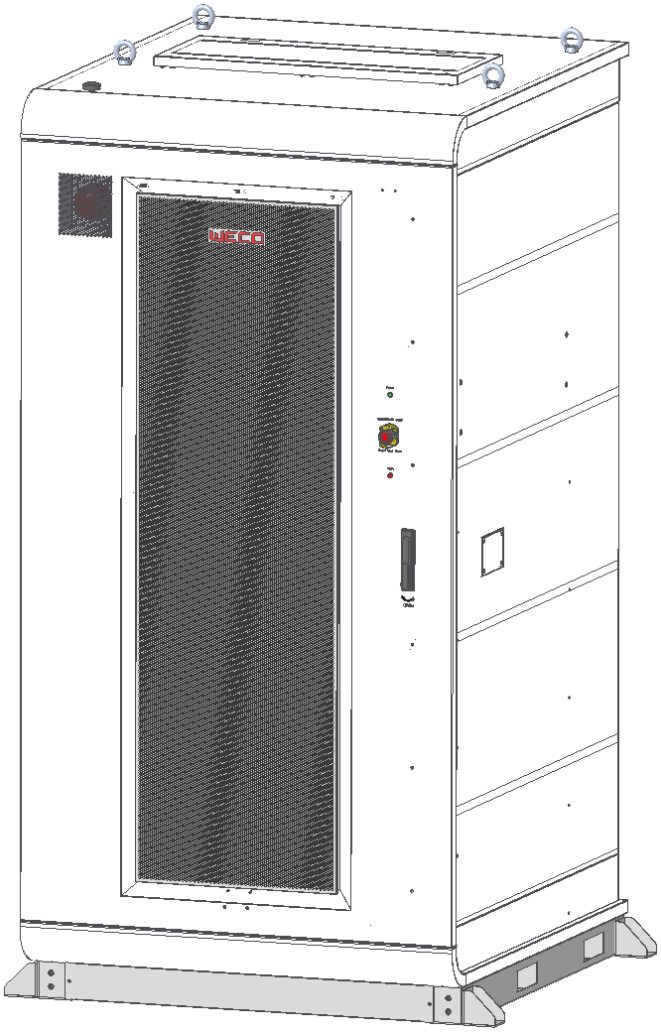

A-KOOL Installation & User manual_V2.2

Lithium-Ion Energy Storage Battery Cabinet

Air Cooled Pre-Assembled Battery cabinet

Installation Maintenance and User Manual

Version released on 04/12/2024

Preface

This document introduces the installation, electrical connection, commissioning, maintenance and troubleshooting methods of the A-KOOL 115K air-cooled battery cabinet.

Before installing and using A-KOOL battery cabinet, please read this manual carefully to understand the safety information and familiarize with the functions and features of the air-cooled battery cabinet.

This manual is intended primarily for the following people:

● Hardware installation engineer
● Installation and commissioning engineer
● On-site maintenance engineer
● System maintenance engineer
● Sales Engineer
● Users

IMPORTANT NOTICE

Do not open the battery cover for any reason.
Opening the battery is a prohibited and potentially dangerous operation.
Do not short-circuit the battery terminals as this may cause fire or explosion.
Do not use charging devices, cables, connectors, fuses, switches that are not approved by WeCo.
The battery and its connections such as cables, switches, fuses, busbars, etc., must be inspected, cleaned tightened every three months or when necessary, taking into account the environmental conditions and/or stresses of use of the system.
Cables and insulators can have an early reduction in their insulation coefficient if exposed to excessive environmental conditions and stresses, therefore, it is necessary to verify the safety of the system by means of cadenced checks that must be defined by the designer during the design phase.
WeCo disclaims any responsibility for illegal or unauthorized actions on the battery.

RECYCLING RULE

At the end of its life, this battery must be recycled according to current regulations. Contact your nearest COBAT centre for more information on the procedure.
Do not incinerate do dot disperse, always contact a recycle company when you need to dispose a battery or an electronic device.

READ THE MANUAL AND CONSULT WECO REGURLARLY TO GET ALL THE NECESSARY UPDATES

In caso di aggiornamenti del prodotto o altri motivi, questo documento verrà adeguato di conseguenza senza necessita di preavviso o pubblicità, sarà reso disponibile sul sito di WECO nella sezione download.
Se non diversamente concordato, questo documento deve essere utilizzato solo come guida e non sostituisce mai alle Leggi vigenti nel tuo Stato. Tutte le dichiarazioni, informazioni e consigli presenti nella documentazione non costituiscono alcuna azione esplicita o implicita che contraddica le normative o gli standard locali.
Per ulteriori informazioni o chiarimenti, siete pregati di contattarci prima di installare il prodotto.
Le informazioni ufficiali e la scheda tecnica più recente sono disponibili su www.wecobatteries.com.
È essenziale che il modulo batteria sia dotato dell'ultima versione firmware disponibile. Le nuove batterie vengono sempre spedite con l'ultima versione del firmware disponibile al momento.
Di tanto in tanto, il firmware verrà aggiornato per migliorare la funzionalità e le prestazioni della batteria.
I firmware sono sempre disponibili sul sito www.wecobatteries.com/download-area.
L'ultima versione del firmware è sempre disponibile gratuitamente e può essere aggiornata dall'installatore locale. Puoi sempre contattare service@wecobatteries.com per maggiori informazioni sulla procedura di aggiornamento.

FOREWORD

Thank you for choosing our product. We will provide you with a high-quality product and reliable after-sales service.
To avoid injury to personnel and damage to the product, please read this manual carefully.
This manual provides detailed information on the operation, maintenance, and troubleshooting of the product, as well as health and safety recommendations.
Some users may not find all the information in this manual sufficient or unclear, therefore, before installing or purchasing WeCo products, they may request a dedicated training course in person or via remote connection.

DECLARATION

The manufacturer reserves the right of final explanation of any contents of this manual.
These batteries cannot be used to power life-saving devices or for UPS or Back-up use to power or support life-saving medical devices.

The battery total capacity is intended to be in the range of100-0% of range of the BMS, when the battery is new.
Capacity is not constant with each cycle and can vary based on many factors, energy degradation is not constant over time or cycles, and is strongly influenced by temperature, C-Rate, and DoD (Depth of Discharge).
The first 500 cycles are typically affected by a greater decrease in capacity than subsequent cycles.
Before purchasing this product, please read the warranty terms available on our website. Always check the latest technical data on our website as it may be changed.
If this manual is not clear to you, do not purchase or install the battery, please ask for a technical meeting by writing to service@wecobatteries.com.
mailto:service@wecobatteries.com
Limited Performance Warranty Documents set parameters to get the best performance out of the battery based on the standard test condition used by WeCo.
Any additional details about this battery, its BMS and compatibility with inverters can be requested by writing to service@wecobatteries.com.
This battery and its accessories are intended to be installed, maintained, and supervised only by experienced and qualified installers.
All trademarks in this manual belong to their legitimate owners; Third party trademarks, product names, trade names, company names and companies mentioned may be trademarks owned by their respective owners or registered trademarks of other companies and are used for explanatory purposes only and for the benefit of the owner, without any purpose of infringing applicable copyright.
The evaluation of the product is an important and necessary phase and must precede the purchase, it is advisable to evaluate the latest technical data sheets made available on the www.wecobatteries.com website or request a copy directly from sales@wecobatteries.com.
Our products and manuals are mainly dedicated to installers and technicians who are experts in the sector with specific qualifications for electrical systems.
The manual, the system certification and the "first start-up" test certificate of the entire system performed according to the national standards of your country, must be given to the end user after appropriate training on the use and maintenance of the battery and the system in general.
These batteries are intended to be marketed for integration into more complex systems installed only by professional operators.
After reading the manual in full, we hope you can purchase our products.
Before purchasing, please carefully evaluate the technical characteristics with the data provided on our website or by requesting the updated version of the battery model currently in production.
Pay attention to the distinction between BMS temperatures and the operating temperatures of the battery as a lithium accumulator, i.e. the temperatures to which the BMS can be exposed without suffering damage, malfunction or being affected in the reading of data such as temperatures voltage current (an incorrect reading of the data for exposures to temperatures out of range could affect the control and safety logic). The lithium battery, on the other hand, should not be exposed to temperatures that are too low or too high, while the temperature excursions of the environment in which they will be installed should remain as constant as possible. Below you will find correct instructions on the use of the battery and the permissible and recommended temperatures.
The technical data sheets may be subject to change due to market or industrial needs, therefore, the technical data sheets present on third-party websites or in any case distributed in the past may not be updated and in any case correct. Get the latest official releases from weco@wecobatteries.com.
The pre-purchase evaluation is an important phase and for this reason it must be conducted carefully and perhaps with the help of qualified and experienced technicians if your knowledge on the subject is not sufficient.
WeCo batteries are developed for domestic and industrial applications and can only be installed and maintained by experienced and qualified personnel, they are not produced for direct sale to private individuals.
ESS (Energy Storage Systems) batteries for domestic applications are designed to maximize the self-consumption of energy from renewable sources. Use for backup systems, or for UPS systems, is possible within the charge/discharge current limits of the ESS.
This manual provides detailed information on the operation, maintenance, and troubleshooting of the product, as well as health and safety advice; the information contained in this manual may not be sufficient to cover specific applications, so, if your specific case is not mentioned, please do not purchase our batteries until every technical and safety aspect of your specific application has been clarified. You can request technical support from service@wecobatteries.com.
WeCo offers two types of warranty on its products, the warranty on manufacturing defects also known as the European warranty and in addition the warranty on performance, this subject to compliance with installation requirements well defined in the warranty document. More information can be found in this manual and on the specific warranty document available for each battery model.

SYSTEM DESIGN BY EXPERIENCED TECHNICIANS

Systems Design is the process of defining the architecture, components, modules, interfaces, and load data for a system by the customer in order to meet the specified requirements
For a solar system these components are the PV modules, the inverter/charge controller and the batteries, as well as the different interfaces of these components.
These systems must be integrated with each other following the respective technical rules and must be compatible with each other.
The design must take into account functional guarantees and performance guarantees in order to guarantee the end customer full satisfaction of the product he will use.
For safety reasons, if the battery is not operating at the temperatures, currents and DODs specified in the performance warranty requirements, it should be inspected frequently according to the conditions of use applied.
WeCo bases warranty and safety on the standard conditions of use described above; Heavier uses and at suboptimal temperatures will have direct effects on premature battery aging and intrinsic safety.
With System Design, the designer, based on the prescriptions of this manual and on his own experience, must guarantee some important steps:
System Longevity: Establishing an appropriate frequency for maintenance and inspections can extend the useful life of the system, preventing premature failures and ensuring that the system operates at optimal levels for as long as possible.
Safety: Regular maintenance and inspections help identify and fix potential safety issues before they can cause accidents or malfunctions.
Operational efficiency: A well-maintained system tends to operate more efficiently, with fewer interruptions due to failures or malfunctions, thus ensuring better performance and reliability.
Cost Consideration: While regular maintenance incurs additional costs, it can actually help reduce overall costs in the long run, preventing costly failures and extending the life of the system.

To ensure that these maintenance practices are followed correctly, it is essential that they are well documented and passed on to the end customer or maintenance person. This includes the preparation of a detailed maintenance plan, which specifies the frequency of different maintenance and inspection activities, based on the specific characteristics of the site and the application in which the system is installed.

BATTERY OPERATION

There are several factors that affect the operation of the battery in terms of its ability to provide capacity and life expectancy.
If you respect the battery, it will work safely and efficiently for many years.

Storage

The battery module should be stored in the original packaging, in a clean, level, dry and cool place indoors.
The recommended storage temperature is 77°F/25°C (case b.), but different storage ranges are acceptable:

14°F to +32°F range / -10°C to +0°C: Inspection required* and recharging** every three months, SOC required at 40-60%

32°F to +86°F range / +0°C to +30°C: Inspection* and recharging** every six months required. SOC required at such ranges 40-70%86°F to +113°F / +30°C to +45°C range: Inspection* and recharging** required every three months. SOC required at such ranges 25-30%
NOTE: Maximum charge is 0.2C at an ambient temperature below 11°C and maximum 0.5C in the range of 12°C to 35°C.
The maximum SoC for maritime transport is regulated by the UN directives or by the transport companies, so it may vary over time.
* Inspection parameters: Identify the state of charge, search for alarms and deal with them accordingly, look for physical damage to the battery module.
**For trickle charging, charging at 0.1C to 0.2C up to 50%-70% SOC is suggested and then discharging to the SOC limit allowed by local regulations.
SOC suggested 30%~50% if stored on the ground.
If shipped by sea, you must refer to the UN38.3 standard; If on the road, refer to local ADR codes or similar.

Temperature of Use and Thresholds

Many chemical reactions are affected by temperature and this is also true for the reaction that occurs in a WeCo storage battery.
The chemical reaction of a lithium ion is slowed down by the lowering of the temperature of the electrolyte contained in the battery, which translates into a lower capacity and a higher long-term performance decay index in direct proportion to the departure from the optimal temperature prescribed by WeCo.
A new battery that provides 100% of the rated capacity at 25°C will only provide about 75% of the rated capacity when deployed at 10°C.
At 0°C charging is not normally allowed by the BMS, except for the emergency condition managed by the BMS.
At temperatures below -7°C the BMS will only allow 0.03C of charging current for emergency situations; at temperatures below -10°C, charging is prohibited.
Although it is possible to discharge the battery down to -20°C, it will then be impossible to recharge it as the charging phase is prohibited at 0°C.
These thresholds do not mean that the battery warranty applies even under such conditions, even if allowed by the BMS as extreme values.
The logic of the BMS does not coincide with the thresholds to be respected in order to benefit from the performance warranty, as compliance or non-compliance with the latter is up to the end customer, while the limitations inherent in the battery safety thresholds are set by the BMS as factory data.
The warranty conditions (Functional and Performance) are well described in the "Limited Warranty" document and should be read before purchasing the product.
For example, the functional guarantee (pursuant to European Regulations) prescribes that the installation of batteries must be in controlled ansd stable temperature, such as +10°C +40°C
For the warranty against factory defects, higher temperatures are allowed, i.e. +0°C +40°C in charge and -20°C +50°C in discharge, at the same time the batteries must not result in Under Voltage alarms,

Most battery capacity/life issues can be traced back to improper charging. Incorrect charging settings can lead to an overcharging or undercharging condition, any incorrect charging process will affect the battery life or its ability to retain power.
The lower the C-Rate of the charge/discharge process, the more the battery will benefit from long-term performance.

Depth of Discharge (DoD)

The depth of discharge is a function that is implemented through the setting of the hybrid inverter, compatible with WeCo.
The deeper the discharge, (e.g. DoD 100% means completely discharging the battery), the shorter the battery life over its estimated useful life.
The number of cycles and the DoD specification will affect the expected life in years that the battery/battery system will provide prior to replacement.
To maximize the remaining capacity over the battery's useful life period, it is recommended to set the inverter's DoD to 80%, this will help the maintenance of health (SoH) for longer.
The functional warranty indicates the maximum DoD at 100% because both the logic and the hardware of the battery have been verified and tested to achieve it, while the performance guarantee establishes that the maximum value of the DoD % (to be set in the inverter) must not exceed the value of 90% at 25°C 0.5C, without prejudice to the previous requirements.
For safety reasons, if the battery is not operating at the temperatures, currents and DODs specified in the performance warranty requirements, it should be inspected frequently according to the conditions of use applied.
WeCo bases warranty and safety on the standard conditions of use described above, heavier use and at suboptimal temperatures will have direct effects on the premature aging of the battery and with it intrinsic safety.

C-Rate

The value of the current used to charge and discharge the battery is expressed in C (1C = Nominal Current of the cell).

Charging/Discharging

Most battery capacity/life issues can be traced back to improper charging also due to improper location. Improper charging settings can lead to an overcharge or over-discharge condition or out-of-range current for the temperature condition and SOC%.

WeCo only guarantees batteries connected via the CAN BMS line to the compatible inverter (see compatibility list on the www.wecobatteries.com website) and used according to the warranty instructions published on the website.

CAN/BMS communication is essential both for active and passive safety reasons and in order to be able to conduct all active control interactions with the inverter. The BMS has dynamic algorithms that vary according to current or previous conditions stored during the charge-discharge or stand-by phases.

Modern inverters / charge controllers are equipped with a CAN / BMS interface and no special settings are required to charge and discharge the battery, except for the setting of the charge / discharge power and the DoD% (if the customer wants to comply with the STC requirements, he must read and comply with the warranty conditions defined as STC and set them on the inverter).

Maintenance at optimal temperature, on the other hand, must be guaranteed by the technical room and the air conditioning equipment installed in it, the inverter is not able to interact with the settings with reference to the temperature of the environment in which it is installed, also because the inverter and battery could be exposed to different environmental factors in different environments.

Warranty (Functional Warranty Against Manufacturing Defects) and Performance Warranty

Although the battery BMS allows a wide range of use both in terms of temperature and charging currents, this should not be interpreted as an implicit authorization to use the battery at these levels with reference to the performance warranty.

For the purposes of the performance warranty, it is mandatory that the battery is used within the range of temperature and charging / discharging current and depth of discharge indicated in the warranty itself and also reported in these paragraphs.

Any other use, even if permitted by the BMS thresholds, is not covered by the performance guarantee.

Firmware Updates

In the event of BMS firmware updates as a result of improvements, corrections, or other reasons, this manual and warranties may be updated accordingly. Check the release notes for critical firmware on the site www.wecobatteries.com at your distributors. Critical Release Firmware must be installed as per warranty requirements: To obtain support if your system is not equipped with a WiFi module, please contact service@wecobatteries.com.

All WeCo batteries produced since the beginning of 2019 can be equipped with a WiFi system for connection to the WeCo Cloud, this solution ensures that you are always updated to the latest FW version notified in the APP, the Upgrade function must still be piloted by the user as during the update the battery will have to turn off for safety reasons and it is therefore necessary to plan this action in such a way that no inconvenience is created for the users of the system.

The FW update can also be carried out locally via Bluetooth App, even in the absence of WiFi; you must have a 4G connection and keep the Bluetooth App open until the App displays: ''NEW FIRMWARE AVAILABLE'' after which you can reach the battery in an area not covered by data signal and/or Wi-Fi and perform the FW update via the BT connection.

Legal Information

Unless otherwise agreed, this document is intended to be used only as a guide to the installation, maintenance and management of the product, all statements, information and advice contained in the documentation do not constitute any express action or implied statement in contradiction with local regulations or standards.

For more information, please contact us.

Official information and the latest data sheet are available on www.wecobatteries.com; however, they can be requested in real time at service@wecobatteires.com. Hyperlinks, third-party links, digital datasheets published on web social media or even printed in print media may not be updated to the current version of the product. Before purchasing the product, check the website for technical data and warranties updated to the current date.

It is essential that the battery unit is equipped with the latest firmware version available on the www.wecobatteries.com site or WeCo APPs.

From time to time, WeCo will release a new firmware to improve the functionality of the battery, if your battery is equipped with WiFi (Paid Accessory) and you are registered on our APP, the new firmware will be visible in the APP and can be updated with a simple click from your phone.

The latest firmware version is always available for free; the battery firmware can be updated by the local installer via RS232/USB and Windows PC (reserved for installation technicians) or via APP for batteries equipped with WiFi dongles.

You can also write an email to service@wecobatteries.com to understand and be supported in the upgrade process.

Important information about the usage of the battery and the thresholds limits

Although the battery BMS allows for a wide range of use, both in terms of temperature and charging currents, and DOD this should not be interpreted as an implied authorization to use the battery at these levels. For purposes of the Performance Warranty, it is mandatory that the battery be used in the range of temperature and charge/discharge current and depth of discharge indicated in the Performance Warranty. See the Limited Warranty Document.

Performance guarantees

This is an additional warranty and applies only to batteries connected via BMS line to an approved inverter, the battery operating parameter must remain within the performance warranty terms. Any other use, even if permitted by BMS ranges, is not covered by the Performance Warranty. See the limited warranty document available on the www.wecobatteries.com website.

General information about batteries and LFP chemistry

Knowing a lithium battery is important for good and optimal storage. An informational guide is available on the website www.wecobatteries.com the Guides and Technical Information section.

Sommario

1. Safety Precautions 11

1.1 General safety considerations 11

1.2 Statement 12

2. Product Introduction 15

2.1 Product definition 15

2.2 Description of appearance 15

2.3 Definition of Battery module interface 18

2.4 Definition of HV box interface 19

2.5 Technical Parameters 24

2.6 Label Description 26

2.7 Features & Functions 28

3. Storage 30

4. Pre-Installation 30

4.1 Pre-installation inspection 30

4.2 Preparation of tools and instruments 31

4.3 Installation location requirements 32

4.4 Electrical Connections 33

4.5 Cable Preparation 34

5. Installation 35

5.1 Personnel requirement: 35

5.2 Step By Step Procedure 36

5.3 BATTERY SYSTEM CONNECTIONS 41

5.4 Connection of the battery modules to the HV Box 42

5.5 Connection of the battery cluster to the inverter 44

5.6 Multi-cluster battery module connected to inverter 45

5.7 Startup and shutdown of high voltage modules 47

5.8 Fault indicator status indication 49

6. System Commissioning 50

6.1 Power on the system. 52

6.2 Power off the system 53

6.3 System Maintenance 53

6.4 Maintaing list 54

7. 7 Disposal of battery cabinets 54

7.1 Dismantling the battery cabinet 54

7.2 Packing the battery cabinet 54

7.3 Scrapped Battery Cabinets 54

PLANNED ACTIVITY TO ENSURE THE SAFETY AND RELIABILITY OF THE BATTERY SYSTEM WITH HEAT PUMP CONDITIONER CABINET CONNECTED TO AN POWER CONVERSION SYSTEM

Before starting any activities, ensure that you have the appropriate safety measures in place as mandated by local regulations and your company's safety supervisor.
This includes having portable firefighting systems, such as CO2 and powder extinguishers, readily available.
Additionally, verify that all personal protective equipment (PPE) and tools comply with your country's electrical codes and the safety procedure of your company.

1. Emergency and Safety Breakers

Frequency: Every 6 months, after any event that triggers the protections, or after an electrical event that might have impacted the reliability of the system.
Procedure:

a) Ensure that all emergency and safety breakers are easily accessible and in proper working condition. Test their functionality regularly to guarantee they can be activated quickly in case of an emergency.
b) Test the emergency buttons across all connected devices to verify they function properly.
c) Ensure the breaker and contactor operates opening the circuit when commanded
d) Conduct regular training to ensure all personnel are familiar with the location and operation of these breakers.

2. Cleaning and Maintenance of External Components

Checking and Cleaning Fans of the Battery Module:

Frequency: Every 6 months (or every 3 months if the area is in a dusty location).
Procedure: Isolate the battery system, remove protective grids, and clean the fans using compressed air and a vacuum to extract the dust without pushing it into the internal parts of the system.

a) Ensure the fans rotate freely and consult the manufacturer for replacement of any defective components to avoid warranty issues.

Cleaning Dissipation Surfaces, Parts, and Exteriors:

Frequency: Every 6 months (or every 3 months in dusty environments).
Procedure:

a) Isolate the battery system from active connections, including the power grid, battery, heat pump, and any other connected systems.
b) Use antistatic cloths and a hoover suitable for electronic components to remove dust from both internal and external surfaces.
c) Do not use water, oils, aggressive products, or acids. A soft brush can be used for cleaning tight corners and surfaces.

3. Inspection of Fixing Bolts and Mechanical Parts of the Cabinet

Frequency: Every 3-6 months or after significant natural events such as storms, earthquakes, typhoons, or heavy rain.
Procedure: Inspect the fixing bolts to ensure proper torque based on ISO standard Torque Chart

a) Check for rust or damage on metal components.
b) Ensure there are no cracks, rust, or obstructions on any doors or access points to the cabinet.

4. Checking Connector Tightness (All Terminals)

Frequency: Every 6 months.
Procedure: Isolate the battery system and open the DC circuit on both side, breaker and maintenance manual cartridge switch.

a) Check and tighten all cable connectors using a torque spanner to ensure proper contact.
b) Ensure all connectors are securely fastened to prevent overheating and potential fire hazards.

5. Tightening of Screws on Battery Terminals

Frequency: Every 6 months.
Procedure:

a) Isolate the battery system.
b) Use a torque spanner to check and tighten screws of the battery terminals and bus bars
c) Inspect for signs of corrosion or overheating and replace defective components as necessary.

6. Checking Protections on the AC Line Input for AUX services of the cabinet

Frequency: Every 6 months or after any relevant event.
Procedure: Isolate the battery system.

a) Visually inspect the protections and verify the correct ratings.
b) Conduct appropriate tests to ensure correct operation and replace any defective components.

7. Checking the Release Circuit (Remote Emergency Button)

Frequency: Every 6 months or after any relevant event.
Procedure: Simulate an emergency condition to test the trip circuit and ensure the battery system disconnects as expected.

a) Verify proper functionality by conducting an actual test.
b) Internet Connection and Monitoring App

9. Checking the Communication between Batteries and Inverter (CAN/BMS)

Frequency: Every 6 months or after any relevant event (e.g., communication loss, system malfunction, or component replacement).
Procedure: Verify Connection Stability

a) Ensure the physical CAN/BMS connections between the batteries and the inverter are secure and free from any damage.
b) Inspect the communication cables and connectors for signs of wear, damage, or loose connections.

Monitor Communication Status:

Use the system's monitoring software or app to check the status of the CAN communication. Look for any warning messages or alarms indicating communication issues between the batteries and the inverter.

a) Ensure the BMS (Battery Management System) is properly communicating with the inverter, exchanging vital information such as state of charge (SoC), voltage, temperature, and current.

Perform CAN Communication Test:

Perform a communication test to ensure that the CAN bus is transmitting data correctly between the batteries and the inverter.

a) Use diagnostic tools to verify the integrity of the data being transferred (e.g., using a CAN bus analyzer or other testing devices).

Firmware Compatibility Check:

a) Ensure that the firmware of both the batteries' BMS and the inverter is up-to-date and compatible with each other.
b) Check with the manufacturer for any required updates or patches that address communication issues.

Check for Fault Codes or Errors locally and via Cloud:

a) Review the system's log for any fault codes or error messages related to communication.
b) If any errors are found, follow the troubleshooting procedure outlined in the manufacturer's guide, which may involve restarting the system, replacing faulty cables, or recalibrating the communication protocols.

Inspect Communication Latency:

a) Ensure the communication between the batteries and the inverter is responsive, with minimal delay.
b) Slow communication can indicate issues within the CAN bus network or interference that may affect the performance of the energy system.

Re-establish Communication After Event:

a) After any maintenance, electrical event, or system reset, recheck the communication between the batteries and inverter to ensure the system is working as intended.
b) Test multiple restart of the system to ensure the self-addressing of the battery module and the data communication is consistent and reliable
c) Check the Communication data alert by disconnecting and plugging again the CAN BMS line from battery cabinet and inverter

Internet Data and Cloud Service

Frequency: Daily.
Procedure: Check the battery system's internet connection daily to ensure proper monitoring.

a) Use the associated app to receive notifications and alarms for system faults.
b) In case of internet disconnection, manually supervise the system daily to monitor performance and safety conditions.

Documentation:

Record the results of the communication check in the maintenance log for future reference, including any repairs, replacements, or recalibrations performed.

SAFETY MANAGEMENT AND SUPERVISION OF LITHIUM BATTERY

Lithium batteries, commonly used in solar energy storage systems, require specific precautions due to their potential risk of fire, explosion and toxic gas release. The following are additional safety measures and best practices for handling lithium batteries.

Specific Risks of Lithium Batteries

Risk of Overheating and Burning of Lithium Batteries due to Thermal Runaway.

Excessive discharge and low temperatures contribute to dendrite formation and subsequent cell damage.

Safety Measures

Preface:

Lithium batteries can overheat and catch fire if damaged, overcharged or exposed to very high temperatures.

Install the batteries in a well-ventilated room capable of maintaining controlled and, if possible, constant temperatures throughout the year.

A correct installation carried out according to the requirements of the manual contributes to improving the overall safety of the storage system.

Although both inverter and batteries are equipped with active and passive safety systems, residual risks that could cause damage to persons or property cannot be excluded if not well understood and assessed during the design phase.

It is essential to ensure that the site chosen for the installation meets the minimum safety requirements, that it is easily accessible, that it allows agile maneuvering in case of an emergency, that it protects against flooding, and that it is away from combustibles, gases or flammable substances.

Constantly monitor battery temperature using battery management systems (BMS). Avoid overloading by using appropriate chargers and overload protection devices.

Risk of Explosion:

Lithium batteries can ventilate if subjected to physical damage or short circuits.

Safety Measures:

a) Protect batteries from shocks and physical damage by using robust housings, marking locations and providing adequate lighting and passive protection against both vertical and horizontal shocks.
b) Carry out periodic checks for signs of damage or deformation.
c) Use short-circuits protection devices and follow the manufacturer's instructions for installation and use.

Risk of Toxic Gas Release:

In the event of overheating, overcharging, misuse or fire (induced or generated), lithium batteries may release gas from electrolytic gasification.

Normally, the cells ventilate by opening the upper cell valve when the internal pressure exceeds about 150 bar, which allows the release of gas and prevents high internal cell temperatures.

Battery sensors managed by the BMS interrupt charging when the temperature is too high, but still far below the thermal runaway trigger.

Risk of Excessive Battery Discharge

Over-discharge of batteries can irreversibly damage the cells and compromise the safety and efficiency of the system.

Excessive discharge can cause dendrites to form inside the cells, increasing the risk of internal short-circuits and fires.

Actions to Take in the Event of Excessive Discharge:

Monitoring: Ensure that the charge levels are above the minimum permissible level, check that the inverter is connected to the AC grid.

Isolation: If a battery becomes excessively discharged, isolate it immediately from the rest of the system to prevent further damage.

Inspection and Replacement: Have a qualified technician carry out a thorough inspection. If the battery is damaged, replace it with a new one.

Preventive Maintenance:

Schedule regular maintenance to check the state of the batteries and prevent excessive discharges.

Set up the APP to notify important events.

Monitor AC-side inverter power switches to ensure emergency charging of batteries in case of low voltage and/or lack of sufficient solar production to charge batteries.

Monitor photovoltaic fuses or breakers to ensure energy production from photovoltaic panels.

Safety Measures:

a) Install gas detectors and adequate ventilation systems in battery installation areas for increased safety and or to match the local regulation
b) Evacuate the area immediately if gas or a burning smell is detected.
c) Use respiratory masks and other personal protective equipment in case of emergency.

Best Practice for Emergency Management of Storage Plants with Inverters, Solar Panels and Lithium Batteries.

In Case of Overheating or Smoke:

a) Immediately isolate the inverter and batteries by operating an emergency button that acts universally on the circuits.
b) Evacuate the area and call the emergency services.
c) Do not attempt to extinguish the fire with water; use CO_2 or powder extinguishers if available.
d) Inform the fire brigade that these are lithium batteries.

In Case of Fire:

a) Use CO_2 or powder extinguishers specifically designed for lithium batteries.
b) Evacuate the area and call the emergency services.
c) Do not attempt to extinguish the fire with water.

Maintenance and Prevention:

Carry out regular checks of the system internally including the condition of the batteries.

Ensure that the batteries are installed in a suitable environment and protected from physical damage. Strictly follow the manufacturer's guidelines for the installation, use and maintenance of lithium batteries.

Important Notes:

The direct current supplied by solar panels and batteries can be extremely dangerous. It is essential that only qualified personnel carry out operations involving the installation, maintenance and repair of the inverter and associated system.

End users should limit themselves to monitoring and reporting activities and always rely on professional technicians

IMPORTANT NOTE: In order to ensure the personal and property safety of the product during use, there are the following warning symbols in this manual and inside the cabinet to remind the operator of the safety issues that must be followed.

Warning symbols

Label	Label indication
Danger!	It is used to warn of an emergency hazard that, if not avoided, could result in death or serious bodily injury.
Warning!	It is used to warn of potentially dangerous situations that, if not avoided, could result in death or serious personal injury.
Caution!	It is used to warn of potentially dangerous situations that, if not avoided, could result in moderate or minor personal injury
Attention	If dropped or crushed, the battery may explode and/or be severely damaged.
Attention	If exposed to an open flame or other extreme heat source, the battery may explode.
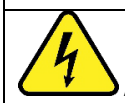 Attention	High voltage hazards, which can pose a risk of electric shock if not handled properly.
Attention	This type of battery builds up parasitic currents. Do not touch the B+ and B- terminals. Always check the B+ and B- terminals with a voltmeter.
Attention	Always wear personal protective equipment, use insulated tools, and follow the safety plan of this manual.
Attention	At the end of their useful life, these batteries must be properly disposed of by a certified professional company.
Note!	Used to convey device or environmental security warnings that, if not avoided, could result in device damage, data loss, device performance degradation, or other unpredictable results. "Caution" does not involve personal injury.
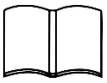 Read important Info	Used to highlight important/key information, best practices, tips, etc. The "Explanation" could also be safety warning information.

1. Safety Precautions

1.1 General safety considerations

Note!

- This manual is an integral part of the Battery Cabinet and describes the assembly, installation, commissioning and maintenance of the product. Please read it carefully before beginning any operation.
- Personnel responsible for Cabinet operation, product installation, electrical connection, commissioning, maintenance and troubleshooting must be qualified electricians and must be trained to use the correct operating methods in accordance with the laws of the state in which the inverter is used.
- Any person involved in the operation, installation and maintenance of the Cabinet must be trained and supervised by a company safety officer regarding the interaction between the inverter and the local electrical system and possible interference with other existing infrastructure.
- WECO is not responsible for the installation process or the selection of installers, who must be qualified according to local regulations. WECO assumes no responsibility for violations of general operational safety requirements or safety standards for the installation and use of the equipment.

IMPORTANT

All information and advice contained in this documentation does not constitute an express or implied action contrary to local regulations or standards.

The safety guidelines included in this document may not include or consider all applicable regulations in the area of installation/operation.

Always review and consider applicable federal, state, and local laws and regulations in accordance with product industry standards.

Note!

All operations of this equipment must strictly follow the relevant equipment precautions and special safety instructions provided by WECO. The safety warnings listed in the manual represent only those parts of WECO's knowledge, and WECO disclaims any responsibility for violations of general safety operating requirements or safety standards for the design, production, and use of equipment.

IMPORTANT NOTICE

If there is a product upgrade or other reasons, this document will be adjusted accordingly.
All statements, information, and recommendations in this document do not constitute any express or implied act contradicting local regulations or standards. For more information, please contact us.

1.2 Statement

WECO cannot be held liable for malfunctions or damage caused in such circumstances:
○ Shipping damage occurred in operations not managed by WeCo ○ Damage caused by storage conditions that do not comply with the requirements of the product documentation. ○ Improper storage, installation and use of the equipment. ○ Unqualified personnel using and operating the equipment. ○ Damage caused by third parties during improper installation or maintenance. ○ Damage caused by non-compliant installation of devices connected to the inverter ○ Failure to observe the operating instructions and safety warnings contained in the product and documentation. ○ Operating in harsh environments beyond what is described in the product and documentation. ○ Operations and settings that go beyond the parameters specified in the applicable technical specifications. ○ Unauthorised disassembly and/or repair, alteration of the product or modification of the software code, installation of inappropriate firmware. ○ Equipment damage caused by abnormal natural environments (such as lightning, earthquakes, fire, storms, etc.). ○ The warranty period has expired, and the warranty service has not been extended. ○ Any installation and operating environment outside of those specified by relevant standards.

Personnel capable of installation, cabling, commissioning, maintenance, troubleshooting and replacement must meet the following criteria:
○ Operators must receive professional training from their employer before operating devices for the first time. ○ Operators must read this manual in its entirety and master safety issues related to operation. ○ Operators must be familiar with the relevant safety specifications of electrical installations. ○ The operator must know the operating principle and composition of photovoltaic storage systems and be familiar with the user manual for this product. ○ During operation, do not wear metal objects such as rings, watches, key rings, etc., and always wear personal protective equipment (such as insulating gloves, insulating shoes, etc..). ○ Installers or company managers must train and inform the end customer in the ordinary use of the inverter and train them on emergency management, how to interact with safety devices and how to interpret alarms or warnings indicated in the APP. ○ The markings on the inverter contain important information for safe operation. It is strictly forbidden to alter or damage the casing and/or the safety markings on the frame. ○ The inverter is equipped with a nameplate on the side which contains important information on product parameters. Alteration is strictly forbidden.

Cabinet identification protection

The markings and nameplate on the A-KOOL cabinet contain important information for safe operation.

It is strictly forbidden to alter or damaging the product from its original status.

The A-KOOL cabinet has a nameplate on the side that contains important parameter information related to the product. It is strictly forbidden to alter or damage.

System Installation.

Danger!

It is strictly forbidden to use the Cabinet connected to any source of electricity during installation at first start-up and in any case during maintenance or troubleshooting, the inverter must first be switched off and then switched on in sequence to exclude injury or damage. Ensure that all power sources are disconnected when installing the inverter. Lock and label all power sources so that they cannot be switched on before installation is complete.

- The process of lifting and positioning the Cabinet must be performed slowly and safely, the product could be damaged and operators could be injured.
- When installing the Cabinet, ensure that it is not electrically connected to any power source.
- There must be at least the distance specified in the manual between the Cabinet and surrounding objects to ensure sufficient space for installation and heat dissipation. If you have any questions about the installation distance, please consult a service technician.
- During installation, avoid liquids, debris or conductive particles entering the system, which could cause internal short circuits or system failure.
- Do not install on rainy or particularly humid days as waterproof connectors, once opened, may retain moisture and then once closed may oxidise internally and become dangerous.

Electrical connections

Danger!

Before making any electrical connections, ensure that the cabinet and its inner parts and batteries are undamaged and carry out installation only under safe conditions.
Avoid installing the cabinet where there is visible damage to prevent electric shock, fire and personal injury.
Do not install the cabinet if there is any damage to the inverter housing or metal casing.

- Keep all the breaker OFF and ensure no voltage is detected at the connection terminals before connecting the cables
- All electrical connections must comply with national electrical standards.
- The battery terminals of A-KOOL are live, do not touch them
- Do not touch the battery Bus Bars
- Do not remove the Bus Bar form the battery
- The cables used in the cabinet system must be securely connected, well insulated, and of appropriate specifications
- All electrical connections must comply with national electrical regulations. If the procedures in this manual or the information contained herein conflict with local laws, do not install the product and consult your technician and/or supplier.
- The equipment must be permanently connected to a protective earth. When installing equipment that must be earthed, the earthing cable must be installed first.
- When disassembling the equipment, the earth cable must be removed last.
- External cables must be protected in cable ducts or pipes and reliably secured with cable clamps and brackets. Buried cables must be marked with special burying markers and then backfilled ensuring that no deformation or damage caused by stresses on the cables occurs during backfilling or later.
- The cables used in the system must be securely connected, well insulated and of adequate specification.
- The use of cables in high-temperature environments can cause the insulating layer to age and damage the cables. The distance between cables and heating devices or heat sources must be at least 30 mm.
- When the temperature is too low, shocks and vibrations can cause the cable's plastic outer jacket to break. All cables must be laid and installed at a temperature above zero, especially in low-temperature environments.
- All DC cables must be installed in such a way as to provide as short a path as possible, and the positive and negative cables of the string or main DC supply must be bundled together. Avoid creating loops in the system.

Procedures

Danger!

During operation of the A-KOOL it must be considered that high voltage is always present at the battery string connection, which can be dangerous. Please strictly follow the safety precautions listed in this manual and other relevant document.
Always follow LOTO procedure to avoid serious safety risks.

- Some inverter components, such as copper bars, inductors, etc., take some time to cool down after being switched off.
- Do not touch them immediately after a power failure and beware of burns.
- Use the equipment in accordance with local rules and regulations.
- Please pay attention even after switching off the system and always check the residual voltage with a tester, the battery terminals are always live, be careful.
- Always comply with local regulations and norms when operating the equipment
- The local technical director must supervise any action following the step by step procedure and LOTO procedure during installation and commissioning

Maintenance and Replacement

Danger!

When using the inverter, be aware that the DC and AC inputs and outputs are "high voltage" and can cause electric shock, resulting in death, serious injury or property damage. Therefore, before performing any maintenance work, you must turn off the power and work in strict accordance with the safety precautions listed in this manual and other relevant documents.

- Maintenance of the A-KOOL 115K must be performed with the contents of this manual and have the appropriate training, tools and test equipment.
- Before performing maintenance, switch off the A-KOOL 115K, disconnect the input and output switches and wait 15 minutes before performing any operation.
- During the maintenance period, prevent access to the maintenance site by uninterested personnel and place warning signs or temporary fencing for isolation.
- The A-KOOL 115K may only be powered up again after the fault has been rectified, otherwise the fault may expand or the equipment may be damaged.
- During maintenance, observe electrostatic protection specifications and wear antistatic gloves.
- Some cabinet components (such as copper bars, inductors, etc.) need time to cool down after a power failure. Do not touch them immediately after a power failure and beware of burns.
- Avoid opening the casing door for maintenance or repair of the product in wet or rainy conditions.
- When carrying out various operations, such as maintenance and inspection of equipment, the personnel concerned must take appropriate protective measures, such as wearing noise-reducing earplugs, insulated shoes and anti-scald gloves.
- Any defective or our of work modules or components shall be replaced
  If a battery module should be replaced it is important that the new battery module will be fully compliant with the existing modules in terms of Age, Cycles and hardware in general, no other brand or model can be used in a replacement action.
- **After an event that lead the batteries and of the components to reach limits outside the allowed thresholds, it is compulsory not to attempt restarting the system and contact the manufacturer for a deep investigation of the batteries.**
  After an Event or Over Voltage, Over Current, Over temperature, Under Temperature, Under voltage over the safe limits prescribed by the Cells/battery packs, it is compulsory to leave the system isolated by the inverter and call the technical support for an immediate inspection of the battery system. Do not attempt to change BMS or EMS to let the system restart. Do not attempt Rebooting or Resetting the system

2. Product Introduction

2.1 Product definition

Function

The air-cooled battery cabinet A-KOOL OD is an outdoor battery cabinet which can consist of up to 15 x 7.67 kWh battery modules and a high-voltage box, which integrates a smoke sensor, temperature sensor, fire protection, access control, water flooding and air conditioning system.

Each cabinet can be composed by a minimum of 4 batteries and a maximum of 15.

Always check the inverter min and max input voltage before setting up the Cabinet ESS system

Model name rules (example)

The model of the 115kW air-cooled battery cabinet system is **A-KOOL 115K**, and the model description is shown in the figure below.

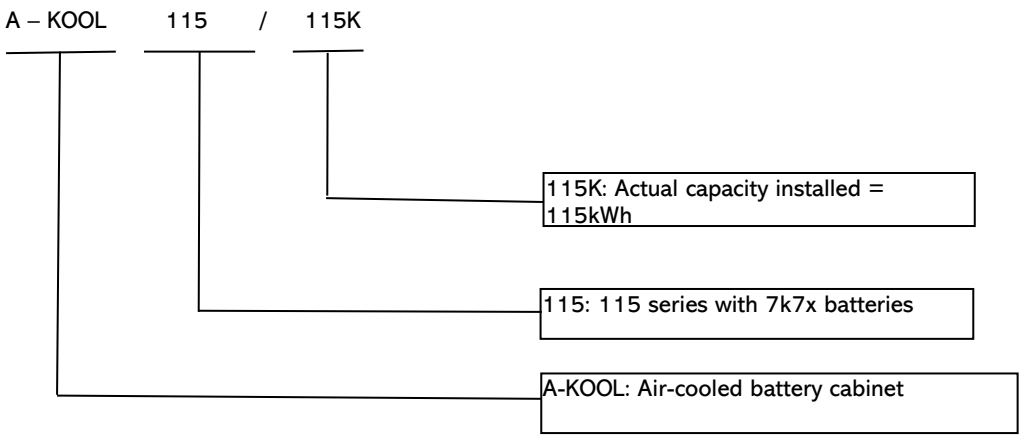

Fig.1.1-1 Model Description

2.2 Description of appearance

Front

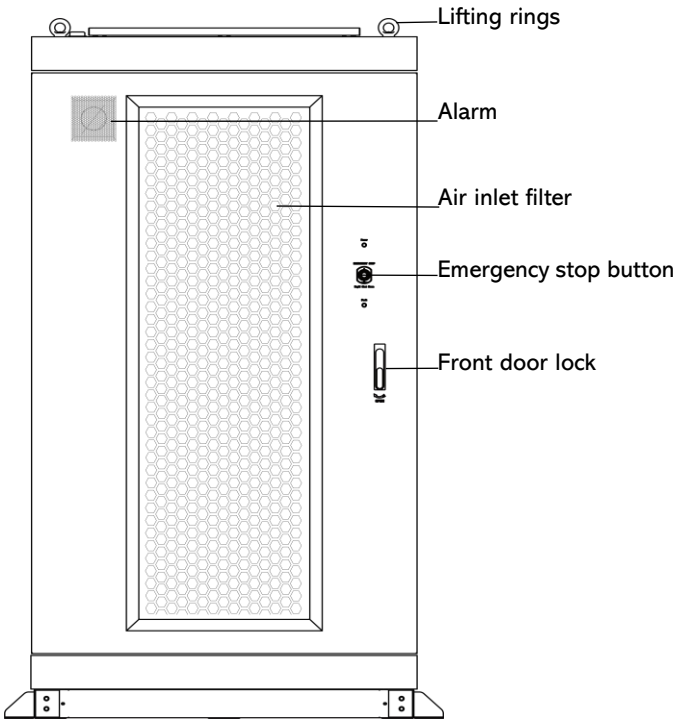

Six-sided view of the cabinet

900mm(W)*2100mm(H)*1000mm(D), height with lifting ring: 2162mm.

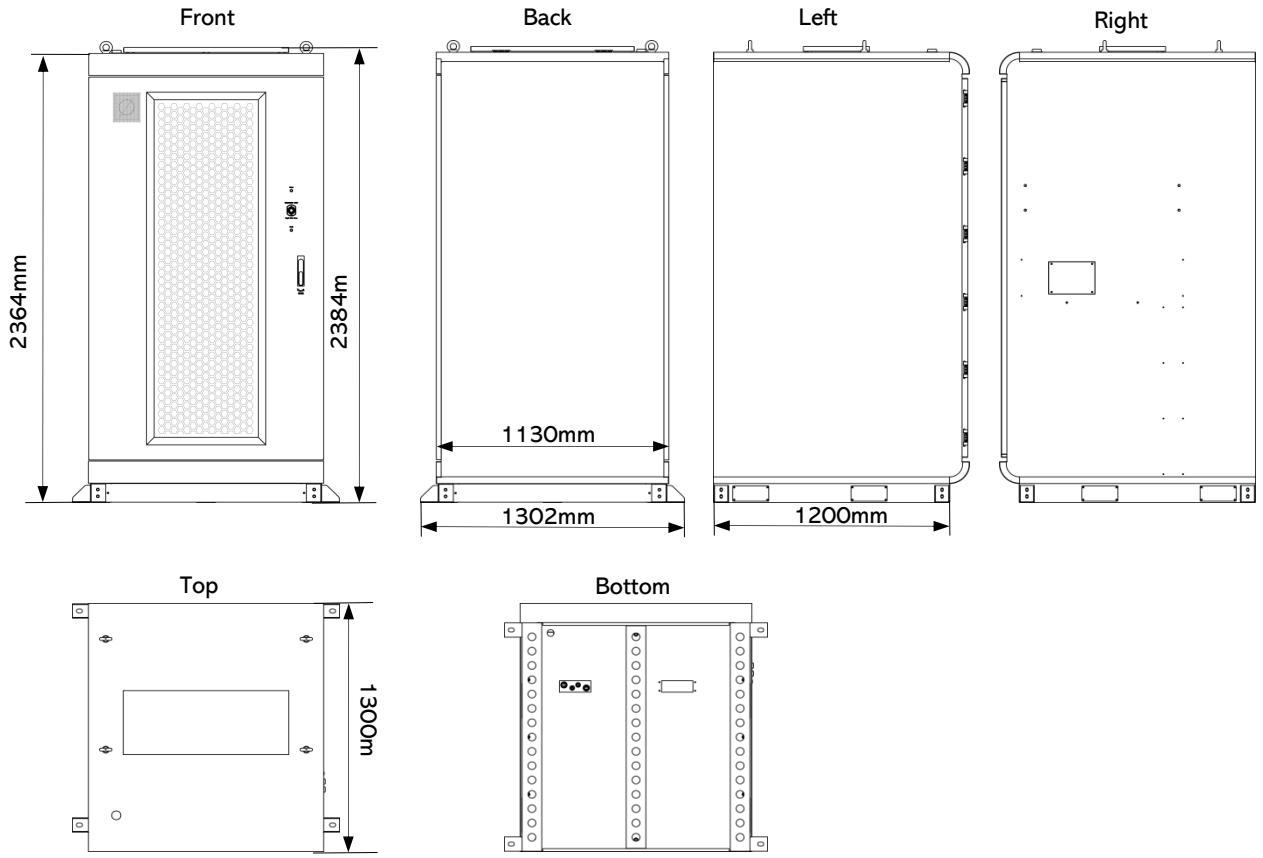

Upper part of the Cabinet (from down to up inner part of the cabinet ceiling)

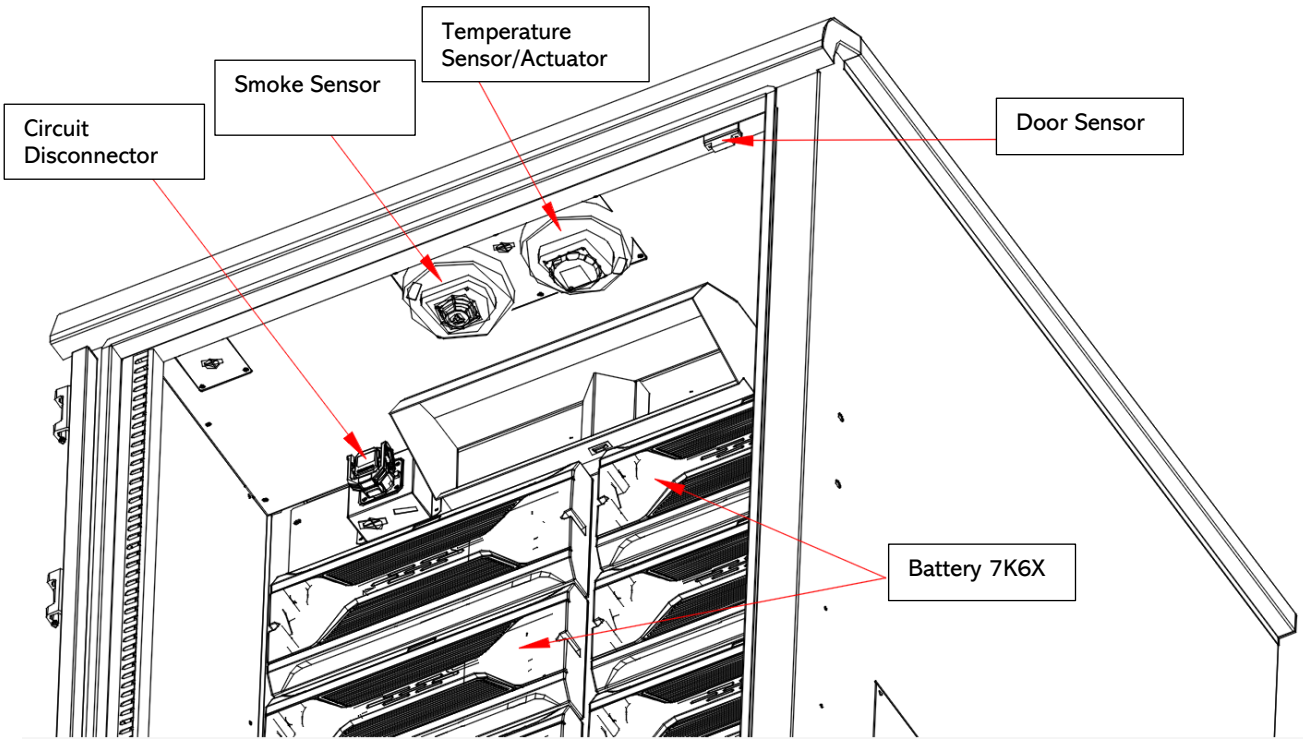

The door is not displayed in this image)

Bottom view (with HV Box on bottom left as example)

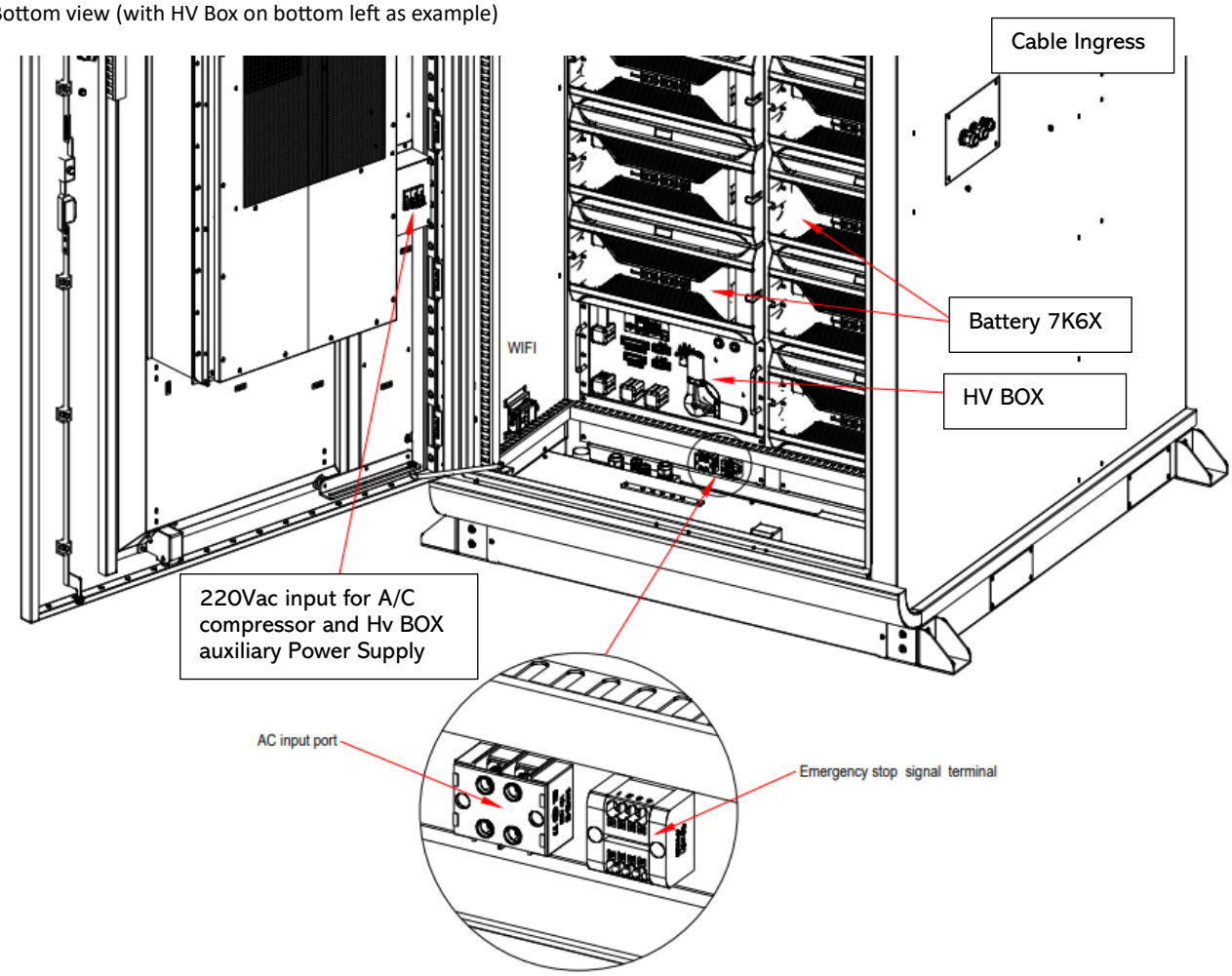

2.3 Definition of Battery module interface

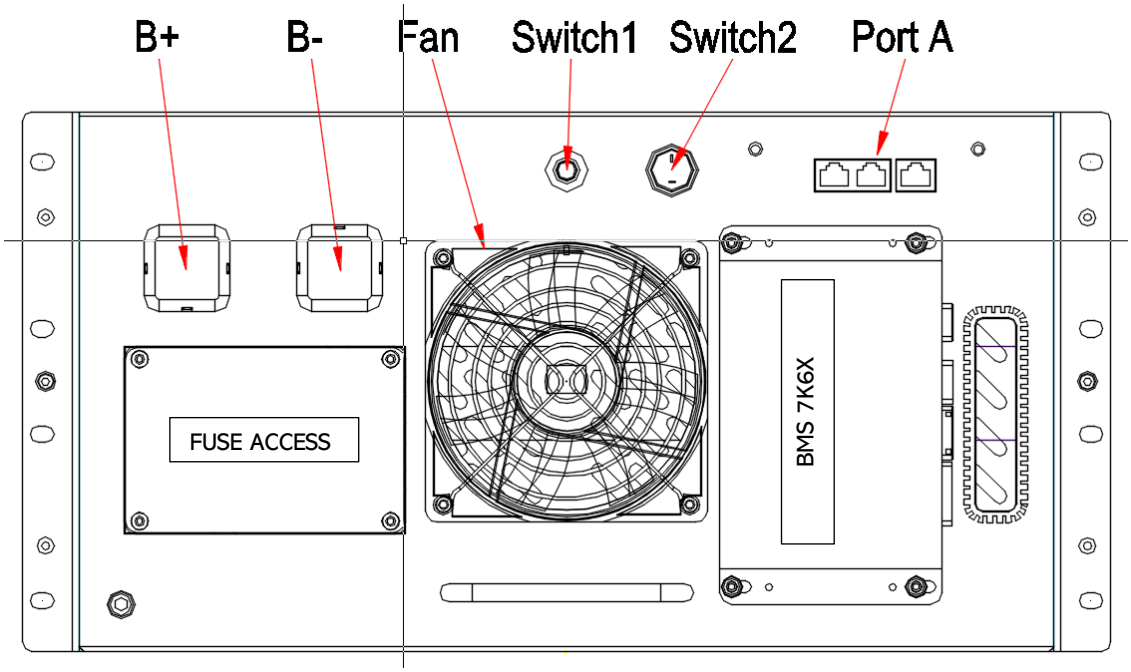

Definition Description

Name	Description	Remark
B+	Positive pole of battery pack	For battery series connection
B-	Negative pole of battery pack	For battery series connection
Fan	Battery pack cooling fan	

Definition Description Port A

PIN	CAN A	CAN B	OPERATOR
1	CANH	CANH	TXD
2	CANL	CANL	RXD
3			VSS
4			VCC
5			
6			
7	WIN+	WDO+	
8	WIN-	WDO-	

2.4 Definition of HV box interface

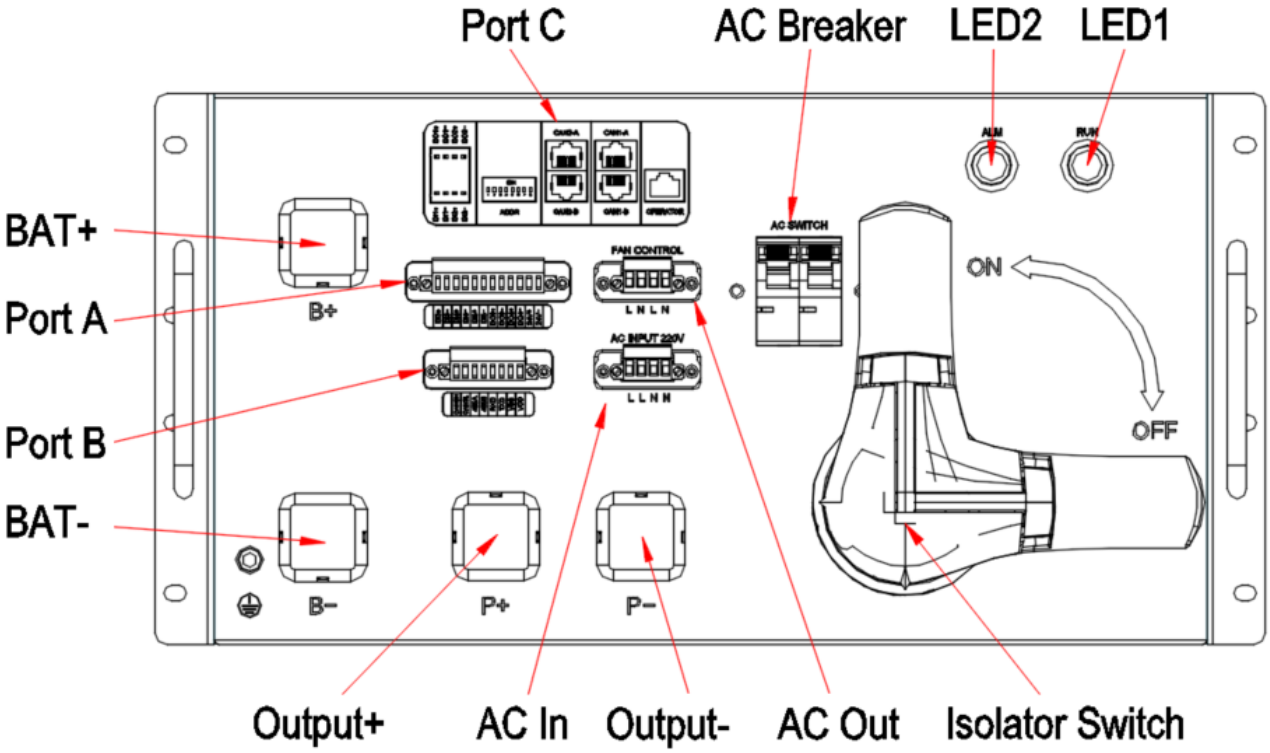

Definition Description

Name	Description	Remark
BAT+	Battery pack series total positive	Connected to first battery positive
BAT-	Battery pack series total negative	Connected to last battery negative
AC Breaker	AC circuit breaker	Internal auxiliary source AC/DC and battery pack cooling fan power supply control
LED1	RUN， Power on LED	
LED2	Alarm， Fault LED	
Output+	High voltage box output positive pole	
Output-	High voltage box output negative pole	
AC In	High voltage box AC power supply input port	
AC Out	Connect the battery pack AC fan for power supply	
Isolator Switch	DC disconnector	
Port A	I/O signal interface A	I/O interface, see instructions for details
Port B	Communication interface B	Communication interface, see instructions for details
Port C	Communication interface C	Communication interface, see instructions for details

Port A definition Description

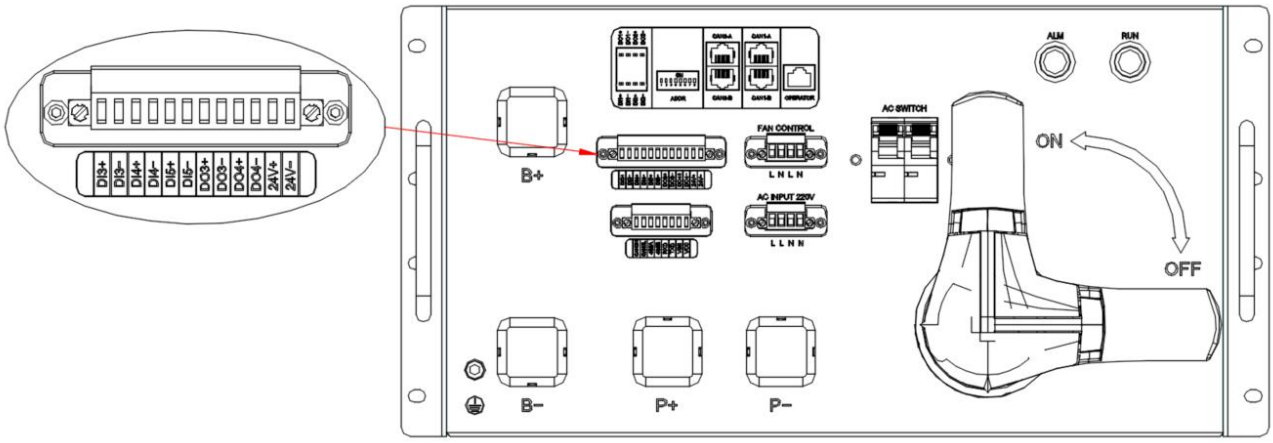

Number	Name	Description	Remark
1	DI3+	Door sensor feedback signal	Report door opening
2	DI3-	Door sensor feedback signal	
3	DI4+	Emergency stop signal feedback signal	Cabinet emergency stop and remote emergency stop.
4	DI4-	Emergency stop signal feedback signal	
5	DI5+	Water sensor feedback signal	Detects the presence of water inside the cabinet at the lower base cabinet.
6	DI5-	Water sensor feedback signal	
7	DO3+	External input AC circuit breaker shunt control	
8	DO3-	External input AC circuit breaker shunt control	
9	DO4+	Fire extinguishing system signal	
10	DO4-	Fire extinguishing system signal	
11	24V+	24V+ Output	
12	24V-	24V- Output	

Port B Definition Description

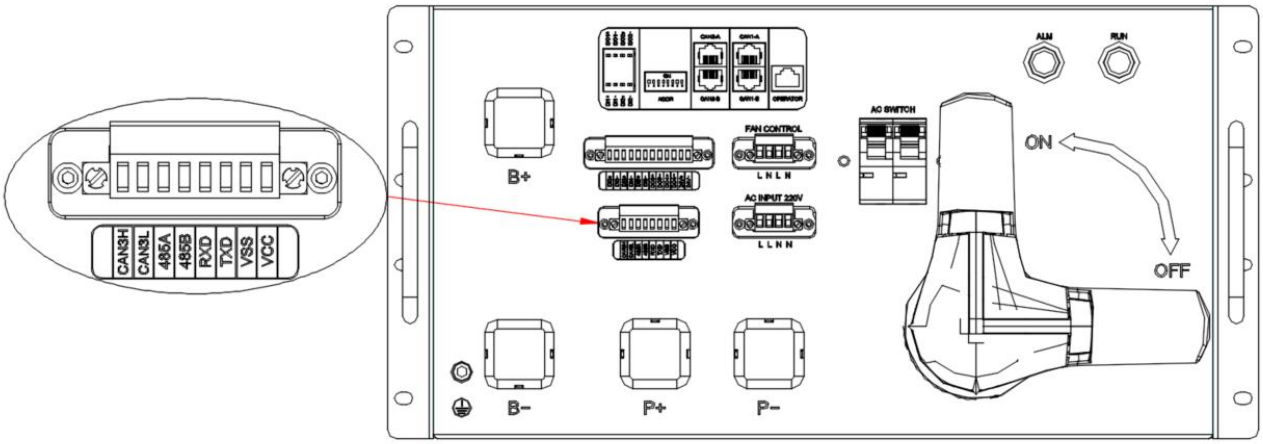

Number	Name	Description	Remark
1	CAN3H	PCS communication port	**DO NOT** use this port for communication with inverter with firmware 99.02 or higher.
2	CAN3L	PCS communication port	
3	485A	RS485A	Internal air conditioning RS485 communication.
4	485B	RS485B	
5	RXD		RS232 communication, Connect Wi-Fi.
6	TXD		
7	VSS		
8	VCC		

Port C Definition Decription

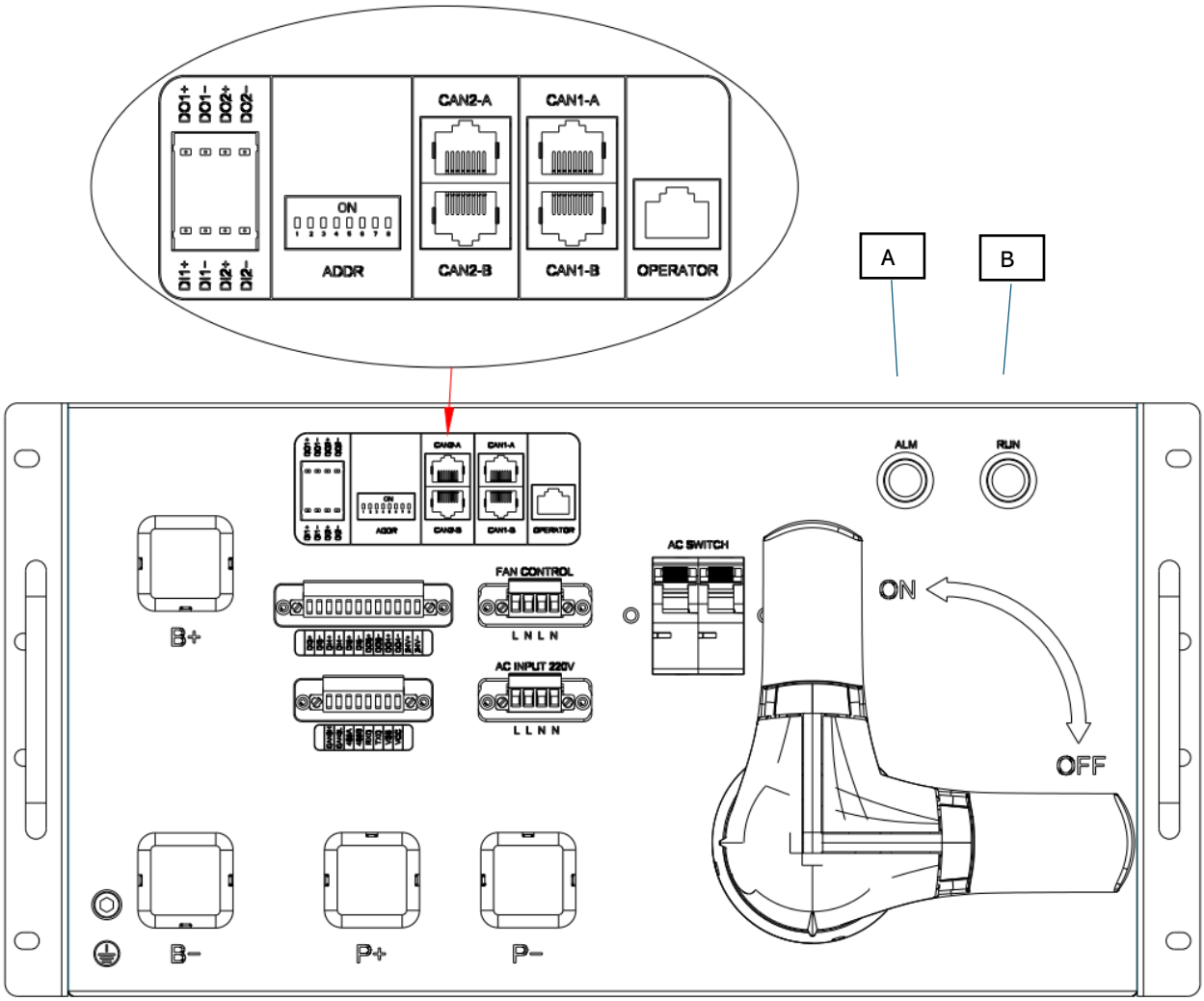

Name	Number	Description	Remark
DO1+		Battery cabinet operation led control	Cabinet running lights output
DO1-		Battery cabinet operation led control	
DO2+		Battery cabinet fault led control	Cabinet faulty lights output
DO2-		Battery cabinet fault led control	
DI1+		Heat sense and Smoke sensor feedback	High temperature and smoke detected
DI1-		Heat sense and Smoke sensor feedback	
DI2+		Fire Fighting device feedback	Aerosol eruption feedback when high temperatures and smoke are detected
DI2-		Fire Fighting device feedback	
ADDR	1	Address signal 1	Supports up to 8 cabinets in parallel
	2	Address signal 2	
	3	Address signal 3	
	4\5\6\8	NC	
	7	Terminator	

CAN2-A	1	Inverter and Parallel communication CAN2H	For firmware 99.02 or higher, please use this port for HV BOX to inverter communication.
	2	Inverter and Parallel communication CAN2L	
	3-8	NC	
CAN2-B	1	Parallel communication CAN2H	
	2	Parallel communication CAN2L	
	3-8	NC	
CAN1-A	1	Battery communication CAN1H	
	2	Battery communication CAN1L	
	3-8	NC	
CAN1-B	1	Battery communication CAN1H	
	2	Battery communication CAN1L	
	3-6	NC	
	7	Battery communication WDO+	
	8	Battery communication WDO-	
OPERATOR	1	TXD	Connect to the PC software
	2	RXD	
	3	VSS	
	4	VCC	
	5-8	NC	

2.5 Technical Parameters

Datasheet		Specification
	Model Name	A-KOOL
Battery Module Specification	Battery type	Lithium iron phosphate（LFP）
	IP	IP20
	Rated Capacity	150Ah
	Battery capacity	7.67kWh
	Max DoD	90%
	Module Weight	80kg
	Charge Discharge Current	Max 150Adc
	Suggested DOD	Max 90%
	Warranty Operational Temperature	+10°C + 45°C
	Temperature Range (Charge/Discharge current limitation applied)	-0°C + 55°C charge -20°C + 55 Discharge
HV BOX	HV BOX	7K6X HV BOX
	IP	IP20
	Operative voltage range	150-1000Vdc
	Max modules in series	15
	Max Current	250Adc
	Inner Contactors	250A
	External Manual Breaker	250A
	Power Supply Input	220C 1Adc 50Hz
System	Rated Energy (fully equipped Cabinet	115 kWh (15S modules 7.67kWh)
	Cabinet max slots (Standard)	15 Batteries +1 HV BOX
	Cabinet min module composition	4 Modules + 1 HV BOX
	Rated voltage	Modules x 51.2Vdc
	Voltage range	Min Voltage 49V x Numbers of Modules Max Voltage 56.8 x Number of Modules
	Max Discharge/Charge Current	150 A
	Recommended Discharge /Charge Current (long cycles life)	0.5C (75A)
	System Short Circuit Current	7000A
	Battery Module Short Circuit System	6800A
	HV BOX Fuses Protection	1000V-250A on both poles
	HV BOX Manual Breaker	1500V 250A Type C Automatic Thermal Protection
	HV BOX contactor rating current	250A on both Poles remotable via external emergency Button
	Cabinet Weight (no modules)	500kg
	HV BOX Weight	45 kg
	Cabinet 15S full Weight	1850 kg
	Cabinet max Elevation	3000m
Cycles	Number of Cycles 0.5C	≥ 8000 (0.5C,90%DOD,65%SOH)
	Number of Cycles 1C	≥4000 (1C,90%DOD,70%SOH)
Communication	Battery to inverter communication	CAN
	AUX Data Communications-MODBUS	RS485
	APP connectivity	NOOR App
	Cloud platform	LAN+4G

Important Note: in the ambient Temperature Range -20°C /-0°C one or more defrost cycle per hours is required according with the Humidity Range, During the Defrost operation the Heat pump cannot heat the cabinet.

In the Ambient Temperature +30 +50°C the HV BOX charging/Discharging current might be reduced to prevent the cell temperature surpass the 50°C (Module inner temperature detection).

BMS Protections	SOC alerts	Built-in
	Cell over- and under-voltage protection	Built-in
	Overload protection	Built-in
	High temperature alarm	Built-in
Passive Protections	External Stop Button (contactor disconnection impulse)	Built-in
	Smoke alarm	Built-in
	Top Windows Pressure release	Built-in
	Fire detection sensor	Built-in
	Firefighting system/gas suppression aerosol	Built-in
	DC protection	Built-in
Shelf-Life Environment	Storage Max Humidity	RH ≤95% (no condensation)
	Storage Temperature	Less than 3 months: 0~45°C (SOC: 20%~50%)
	Shelf Life without inspections	>3 months: 15~35°C (SOC:20%~50%)
	Storage Elevation	≤3000m
	Dimensions (W*D *H)	1340*1180*2364mm
Basic Parameters	Empty Cabinet Weight	500kg
	Cabinet design working Temperature range	-20°C +55°C (Defrost Cycles to be considered)
	IP rating	IP55
	Cooling Method	Heat Pump and Air conditioner built in
	A/C stand by consumption (inactive compressor status via EMS)	50W
	A/C consumption at max cooling Power (above 35°C ambient temperature and 1C discharging power)	1200W
	A/C consumption at max heating Power (below 0°C ambient temperature)	2500W
	A/C consumption with compressor OFF and Fan running for air circulation only	250W
	HV BOX self-consumption	15W
	HV BOX consumption with all fans running full speed	75W
	Energy Saving Programming Mode	Scheduling via EMS for full energy saving
	Coating	Standard Outdoor Paint (C-4 for Salty /Saline Applications at least)
	Shipping Method	Batteries to be installed on site

2.6 Label Description

Cabinet identification

Icon	name	meaning
	High voltage hazards	There is a high voltage inside the battery cabinet, do not touch the internal copper bar and terminals, otherwise it may cause a risk of electric shock.
	Check the instruction manual logo	Remind the operator to check the instruction manual of the battery cabinet box.
	Battery cabinet grounding label	Protect the location of the ground wire.
	Battery cabinet serial number label	Serial number information.
	Battery cabinet login QR code label	Scan the code to connect to the battery cabinet APP.

Read Info

The icon is for reference only, please refer to the actual product.

Indicator light description

Light	name	Indicator definition
Green	Work indicator	Green light: Working Status Green light off: Not working /Off Status
Red	Fault indicator	Red light: There is a fault in the system red light off: The system is faultless

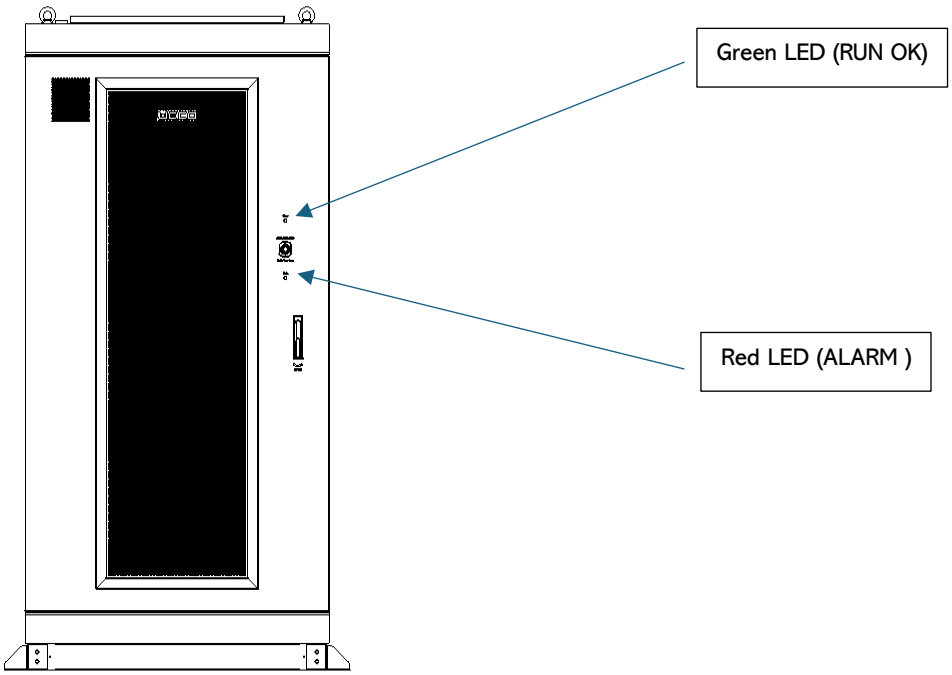

Nameplate

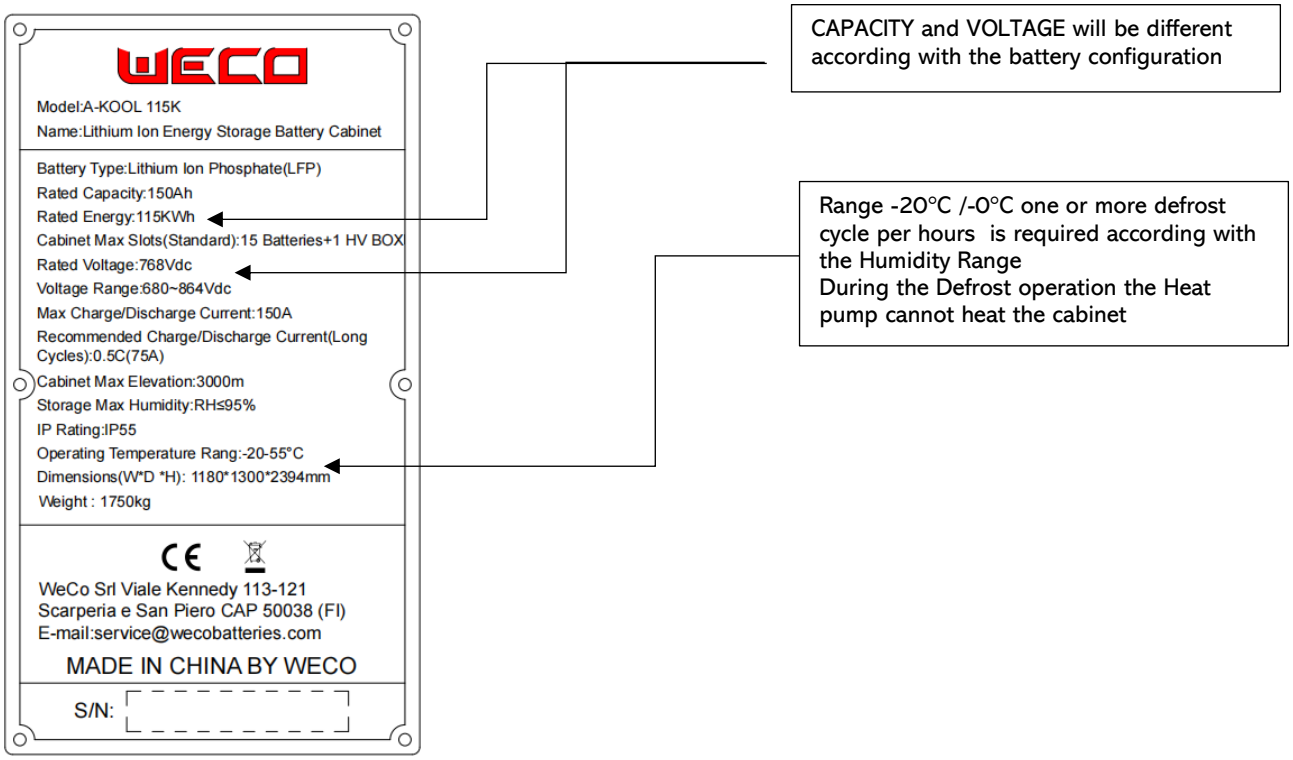

(1) Trademark and product model.
(2) Important technical parameters.
(3) Identification of the certification system in accordance with the company.
(4) Company name and place of origin.
The label is for reference only, please refer to the actual product.

2.7 Features & Functions

Features

The A-KOOL cabinet system consists a minimum of 4 and up to15 battery modules connected in series in high voltage set up and one or two control box (HV BOX), according with the system configuration.

Each battery pack is equipped with a BMS that records the voltage, current and temperature of the battery cells.
The high voltage box is integrated with a EMS management system to manage all battery packs.

HVAC functions

When the temperature in the cabinet is more than 28 degrees, the air conditioner starts refrigeration, and when the temperature is lower than 23 degrees, turn off the refrigeration. When the temperature in the cabinet lower than 12 degrees, the air conditioner starts the heat pump, and when the temperature is more than 16 degrees, turn off the heat pump. In this way, the temperature in the cabinet is constant, so that the battery works in a suitable environment and the energy consumption of the A/C compressor is minimized.

Note: these values may be subject to change with firmware updates.

ATTENTION!

Cold start at -20°C is possible, but the effective optimal temperature inside the cabinet might take up to 24/48h to pass from -20°C to +5°C in order to allow the HV BOX to permit the battery Charge/Discharge Operations.

Always consider the defrost cycles of the A/C compressor depends by the local Humidity Index, more is humid more ice will accumulate on the external radiatior, more desfost cycles will be required.

Sensor functions

Flooding detector: Located at the bottom. HV box will cut off the battery output when water be detected.
Door sensor: If the door is not closed properly, the system goes into alarm.
Smoke sensor & Temperatures sensor: In the event of a cabinet fire, the smoke and temperature sensor will activate the extinguishing fluid that will be sprayed onto the battery system.

Other functions:

In in the event of a pressure release due to the fire extinguishing process, the upper window may open to prevent lateral deformation and damage, ensure that the cabinet has at least 2 metres of clearance from the ceiling.

The cabinet has a Wi-Fi module, connect to the Wi-Fi module to the internet for remote management through the WeCo NOOR APP.

Description of the LED of the HV BOX and the Main Door

Light	name	LED definition
Power	Power-on LED	Green light: The system is powered on Green off: The system is not powered on
Fault	Fault indicator	Red light: The system is faulty Red light off: The system is running normally

Schematic Diagram of the system

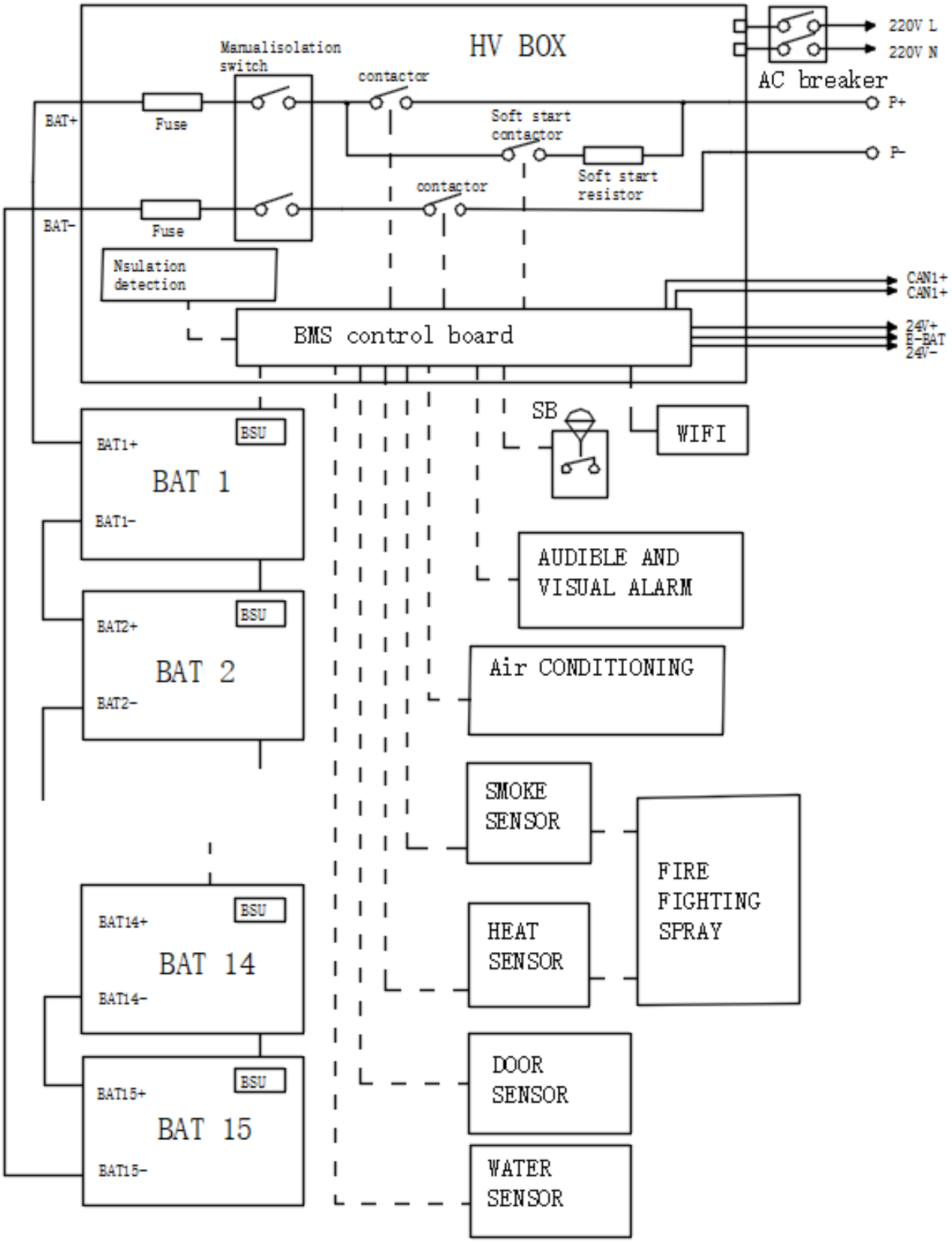

3. Storage

If the battery cabinet is not immediately put into use, it needs to be stored in the following conditions:

- Store Indoor in a dry and ventilated room
- Do not remove the outer packaging of the battery cabinet.
- The storage temperature before the installation should be kept at +10°C~+30°C for up to 3 months to avoid internal imbalance, and the relative humidity should be kept at 5% RH~75% RH.
- Store in a clean and dry place and protect from dust and moisture.
- Unload and move the wood box carefully to avoid personal injury or damaging the products
- Paint is sensitive to scratches, if any scratches is made due to a mistaken operation it is compulsory to repaint with approved paint, contact weco for details
- DO not tilt when moving
- Do no store in uneven floors the structure might be damaged.
- Regular inspections every 3 months should be carried out during storage.
- If insect and rats are present in the area, it suggested to change location or protect the room from the to access into it, rats or insects can heavily damaging the wiring and the safety devices of the system.
- We suggest that the cabinet be put into operation within three months from the production date.
- If a longer period is required before final commissioning, WeCo recommends charging the cabinet at 100% and discharging it at 50% after arrival and repeating this every three month until commissioning is complete.
- In any case, if stored for more than 3 months, it must be inspected and tested by professionals before being put into operation.

4. Pre-Installation

4.1 Pre-installation inspection

Check the outer packaging

Before unpacking the product, check the outer packaging for visible damage, such as holes, cracks or other signs of possible internal damage, and check the battery cabinet model. If the packaging shows anomalies or the model of the battery cabinet does not match, do not open it and contact your dealer as soon as possible.

Note!

We recommend removing the outer packaging of the cabinet 24 hours before installation, to let the system fully dry from external moisture and to have appropriate time to inspect any part, internal ed external, before commencing the installation operations

Check the accessories.

After unpacking the combiner box, check that the accessories are complete and free of visible external damage. If anything is missing or damaged, contact your dealer.

Read Info

For the number of accessories to be included in the box, please refer to the Packing List inside the box.

4.2 Preparation of tools and instruments

Class	Tools & Gauges		
Installation	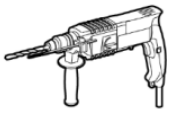 Percussion drill (drill bit Φ12mm)	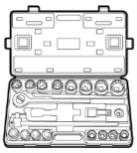 Torque socket wrench (socket opening: 13mm, for M8 bolts; torque range: 0N•m~ 15N•m)	 Torque wrench (opening size: 13mm; torque range: 0N•m~1.5N•m)
	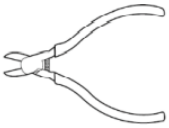 Diagonal pliers	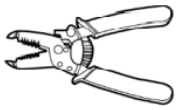 Wire strippers	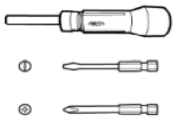 Torque screwdriver (bit: M4, M6; torque range: 0N•m~ 5N•m)
	 Rubber hammer	 Tool knives	 Wire cutters
	 Crimping pliers (Model: H4TC0001; Manufacturer: Amphenol)	 Multimeter (DC voltage range≥ 1000V DC)	 Cable ties
	 Vacuum cleaner	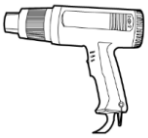 Heat guns	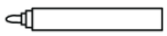 Marker
	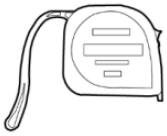 Steel tape measure	 Level	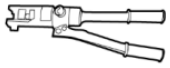 Hydraulic pliers
	 Heat shrink tubing		

Personal protective equipment	Safety gloves	Protective goggles	Dust masks
	Safety shoes		

4.3 Installation location requirements

IMPORTANT REQUIREMENTS

Basic Requirements:

- The battery cabinet is rated IP55 and can be installed both indoors and outdoors. It always advisable to install the cabinet in a protected environment, not in direct sunlight, and avoid accumulations of snow and debris above the cabinet.
- The battery module and HV BOX is rated IP 20 hence such devices must be preserved in comply environment.
- Never leave the door opened to avoid the formation of condensation inside the cabinet
- DO not start any maintenance if the RU is above 70% and never open the doors in rainy or snowing conditions
- To keep the cabinet safe and ensure less stress it is highly suggested to keep the cabinet shaded and protected
- During operation of the battery cabinet, the temperature of the outgoing air will be relatively high; reserve a ventilation distance of at least 200 cm to the front.
- Do not install the battery cabinet in an area where flammable and explosive materials are stored.
- Do not install the battery cabinet in a place accessible to children.
- Battery cabinets installed in saline areas are susceptible to corrosion that can potentially cause fire; do not install battery cabinets outdoors in saline areas because the HVAC system cannot completely filter out the saline composition, cooled or heated air flowing from the A/C compressor flows into each battery module, and if salt or an aggressive agent is present in the air, the internal parts of the HV BOX and battery could be damaged.
- Saline areas are defined as areas located within 1500 m from the coast or under the influence of sea breezes. The area affected by sea breezes varies depending on weather conditions (e.g. typhoons and seasonal winds) or topography (with dikes, hills, etc.).

Installation environment requirements

- The battery cabinet should be installed in a well-ventilated environment to ensure good heat dissipation.
- If the battery cabinet is installed in direct sunlight, it may cause the power to decrease as the inner temperature might increases during the summer season. Install the cabinet under a shelter if installed outdoors.

Mounting Carrier Requirements

- The concrete platform shall support at least five times the weight of the cabinet
- The concrete slab shall be able to accommodate the fixing screws for at least 15 cm depth into the solid concrete.
- The battery cabinet mounting carrier, bolts, nuts must be fire-resistant for at least 120 minutes
- Do not install a battery cabinet on flammable building materials.
- Ensure that the installation area and surrounding spaces meets the load-bearing requirements of the battery cabinet installation and maintenance requirements.
- The cabinet must be installed and protected from accidental impact of vehicles, bollards or fence shall be installed
- The cabinet must be fixed on the ground on a solid surface able to withstand typhoons and earthquakes it is compulsory to consult a civil engineer for verification.

Installation angle requirements

- The battery cabinet should be installed on the ground with good load bearing. Angle requirements for installation:
- Please install it vertically, do not tilt the battery cabinet forwards, horizontally, backwards or sideways.
- Ensure that the door can be fully opened and ensure that the at least 200cm are available on the front of the cabinet
- Do not install two cabinets front facing to another device or obstacle as the A/C compressor Air outlet might impact both cabinet operations

Installation space requirements

When installing the battery cabinet, consider leaving 200mm on the backside to ensure sufficient space for installation, cleaning and heat dissipation.

Installation space diagram

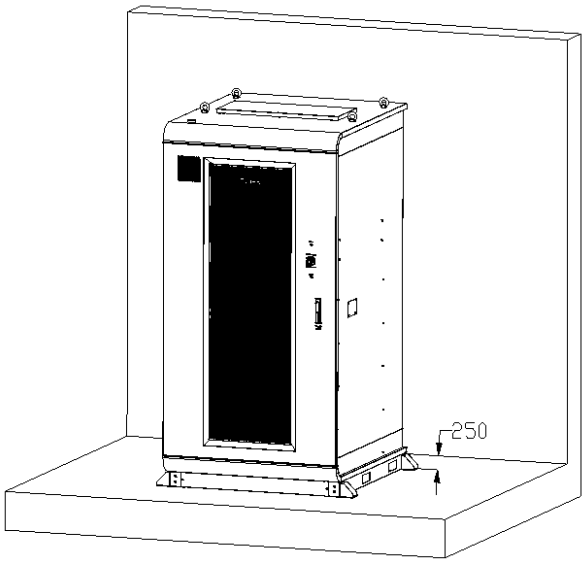

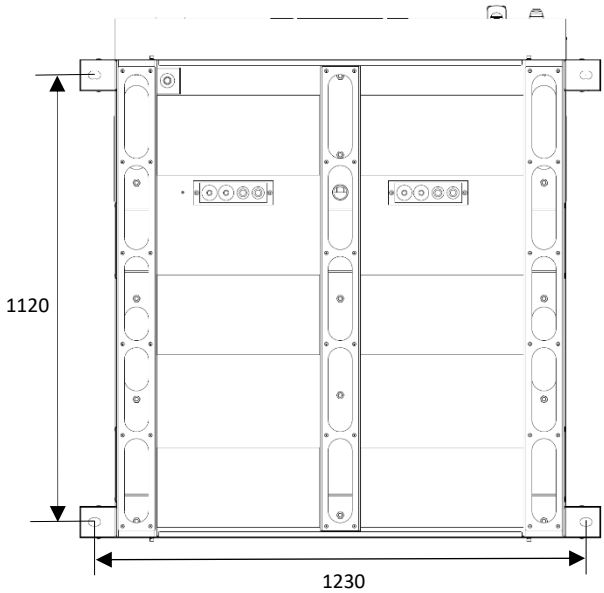

4.4 Electrical Connections

Danger!

Before making the electrical connection, make sure that all switches in the cabinet are in the "OFF" state, otherwise the high voltage of the cabinet may cause a risk of electric shock.

Warning!

Damage to the device caused by incorrect wiring is not covered by the equipment warranty.
Operations related to electrical connections must be carried out by professional electrical technicians.
When making electrical connections, operators must wear personal protective equipment.

Read info

The colour of the cable involved in all electrical connection diagrams in this section is for reference only, and the cable selection should comply with the local cable standards (yellow and green two-colour wires can only be used for protective earthing).

IMPORTANT MECHANICAL SETTINGS

Torque requirements

When using screw (bolt) crimping, all connecting fasteners must meet the tightening torque or tightening force and must not undergo any plastic deformation, cracks or breakage.

Screw torque recommendation table valid for any screw of the cabienet and battery

Screw type	M3	M4	M5	M6	M8	M10	M12	M16
(N*m)	0.7-1	1.8-2.4	4-4.8	5-8	12-19	34-40	60-70	119-140

4.5 Cable Preparation

IMPORTANT NOTICE

Conductor diagram for reference only, the finals design shall be approved by a local authorized electrical engineering

(copper core size)

NO.	Cables	Type	Conductor cross-sectional area	Outside diameter	Provided by
2	Battery output power cables.	Industry-wide outdoor photovoltaic cable (recommended model: PV1-F).	50mm2 (it may change according to the inverter max current)	12mm-15mm	Installer
3	Cabinet AC input cables.	Single-core outdoor copper cable and M6 OT terminals.	4-6mm2	4mm-6mm	Installer
4	24V power cable	Industry-wide single-phase AC cable (L+N).	0.5mm2	2.5mm	Installer
5	RS485 signal cables	Shielded twisted wires.	0.5mm2	1.5mm-2.5mm	Installer
6	CAN communication cables.	CAT5e or CAT6 LAN cable.	/	/	Installer
6	Protective grounding wire.	Single-core outdoor copper cable and M6 OT terminals.	16mm2	7mm-9mm	Installer

Note: The PE of the AC output interface is only used as an equipotential bonding point for protective earthing and cannot replace the protective earthing point of the chassis housing.

5. Installation

Note: Please read this manual carefully before install the system.

5.1 Personnel requirement:

Only qualified professionals may install this product. Wiring may only be carried out by professional electricians certified by the local power company.

At least two installers are required to install this product.

It is necessary to have heavy lifting machinery to move the device and to support the installation process

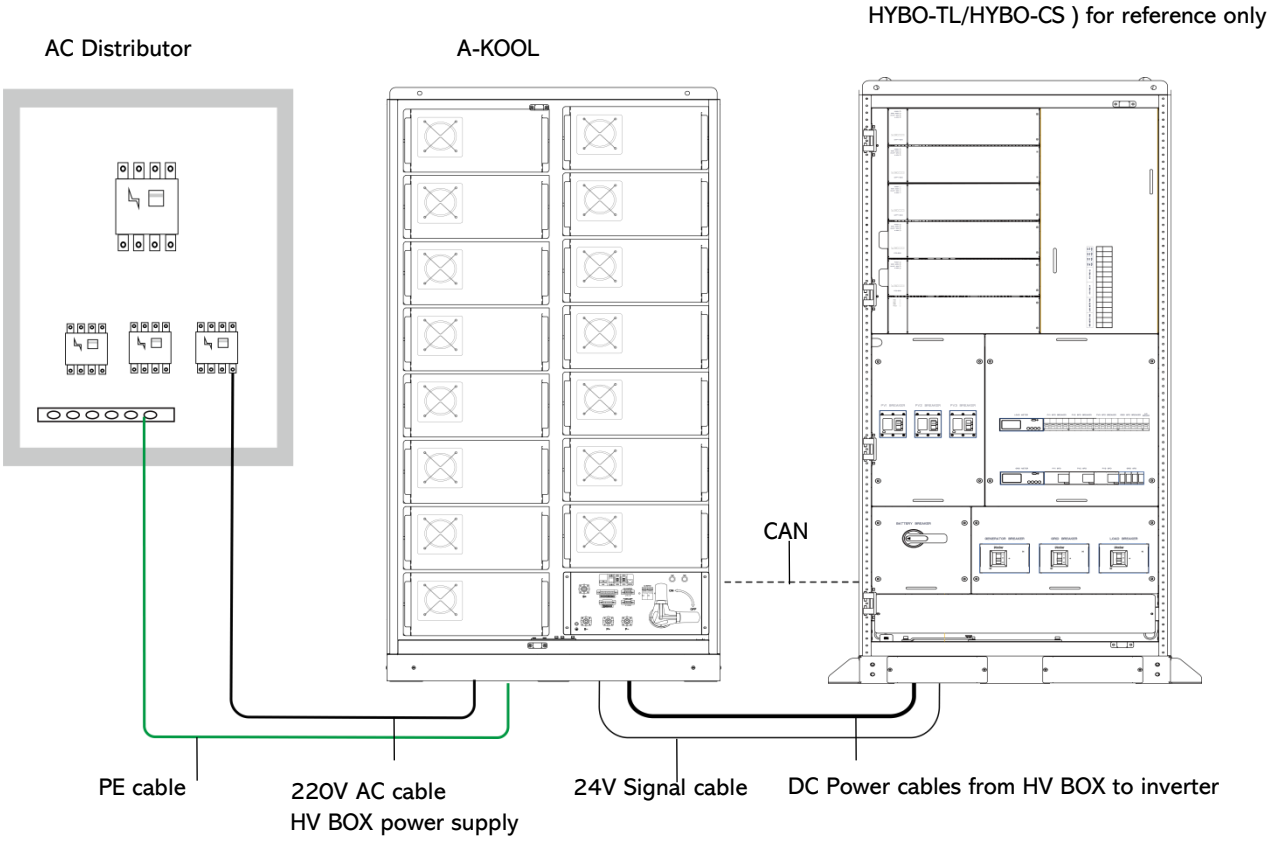

5.2 Step By Step Procedure

WARNING / IMPORTANT NOTICE

Disclaimer

This installation guide is intended to provide general instructions for the proper installation and operation of the A-KOOL battery cabinet. While every effort has been made to ensure the accuracy and completeness of the information provided, this guide **cannot be perfectly precise** in every situation.

It is the responsibility of the installer to exercise **extreme caution** and to apply **professional judgment** at all times to prevent injuries, equipment damage, or potential hazards. The installer must ensure compliance with **local regulations, standards, and manufacturer guidelines**.

Neither the manufacturer nor the author of this guide shall be liable for any **errors, omissions, or misinterpretations** of the information contained herein, or for any **incidents, damages, or injuries** that may result from following these instructions. Always prioritize **safety** and follow **Lockout/Tagout (LOTO) procedures** and other safety measures to ensure the safety or the persons

1. Positioning and Securing the Cabinet

- **Place the A-KOOL cabinet** on a solid concrete base, flat and levelled
- **Secure the structure** to the base using adequate bolts to prevent movement.
- **Level the cabinet**, ensuring that the base is perfectly horizontal.
- Ensure that water **cannot flow into the cabinet** by checking that the surrounding area is free of any drainage or flooding issues.
- **Check the sewage duct and grill** near the installation site to ensure they are clear from any blockages.

2. Removing Packaging

- Remove the wooden box and packaging material from the A-KOOL cabinet, taking care to avoid scratching the surface.
- Open the cabinet door slowly and inspect the interior to ensure nothing is damaged.
- Ensure all batteries and breakers are turned OFF.

3. Grounding the Cabinet

- Ensure the grounding (GND) rod is installed, accessible, and that the dispersion value is within the local regulation limit.
- Connect the structure of the A-KOOL battery cabinet to the GND rod to establish proper grounding.

4. Battery Inspection

- Remove the cover of the **bus bar screw terminal**.
- Using a **voltmeter**, check the voltage of each battery module inside the cabinet
- **Document the voltage readings** of each battery. All modules should have nearly the same voltage—any significant deviation in series connections can lead to imbalance in the battery cluster.
- After voltage inspection, proceed with the **torque verification** of the battery bus bar series connection to ensure all connections are secure.

5. Ensuring Inverter Safety

- Before proceeding, ensure the **inverter** is turned **OFF** and that no **AC or PV power** is connected.
- Measure the voltage at the inverter terminals using a voltmeter to verify there is no **residual voltage**.
- Follow the inverter manufacturer's manual and connect the power and communication cables to the correct ports.

6. Connecting Power Input from Inverter

- Pass the **power input cables** from the inverter to the HV BOX through the designated cable ingress points (side or bottom) while maintaining IP65 compliance.
- Connect the cables to the screw terminal of the **HV BOX** and tighten with the specified torque value.

7. Connecting Communication (CAN BUS)

Connect the **CAN BUS BMS** cable from the inverter to A-KOOL by plugging it into the RJ45 port of the HV BOX.

8. Connecting HV BOX Power Supply (220V AC)

- Connect the 220V AC auxiliary power supply for the HV BOX through the **bottom access ingress**.
- Do **NOT switch on the AC breaker** for this auxiliary line yet.
- Connect the **AC supply line** to the compressor for the HVAC (cooling) system into the dedicated terminal.

9. Emergency Stop Button Connection

- If necessary, connect the **emergency button remote input wire** from the emergency button to the inner terminal inside the A-KOOL.
- Perform a **voltage-free continuity test** to verify that the status changes when the button is pressed.

10. Powering the Inverter

- Once all connections are made, ensure the inverter is still **OFF** on all power sources.
- **Connect the battery circuit** by securely plugging in the disconnector located on the upper side of the cabinet.
- Proceed to power the **220V AC auxiliary circuit** for the HV BOX and compressor.
- Once energised, close the DC switch of the inverter first, then switch on the battery cabinet by first closing the rocker switches of all batteries and then the HV Box breaker. This will initiate the precharge function to the inverter.

11. Powering the System

- After the battery circuit is closed, the **inverter will be powered** and should begin to wake up.
- Close the **PV breaker** and finally, the **AC breaker** to complete the system setup.

12. Verification and Cloud Setup

- Verify that the **CAN BMS communication** is functioning correctly and that all parameters are within the expected range via the **Bluetooth (BT) App**.
- Set up the **Cloud Account** using the WiFi app and ensure all data is correctly sent to the NOOR cloud for remote monitoring.

Test the safety device effectiveness by engaging the emergency stop manually and remotely, then apply for the manual restart and ensure all the modules are back online.

Test the communication between the inverter and the HV BOX is not disturbed by any other devices in the vicinity.

Mark down the Check list and leave it to the customer with the time and date and signature, later the commissioning check list will be required by WeCo for the Warranty registration.

See last pages of the manual.

Install the A-Kool on a floor:

- Mark hole position on a solid and flat floor for A-KOOL installation.
- Use one 16mm2 driver bit to drive 4 holes, the depth 150mm.
- Put the HYBO on the position, align the foots with the holes.
- Fasten all bolts (4*14mm) Unlock the front door and open the door.

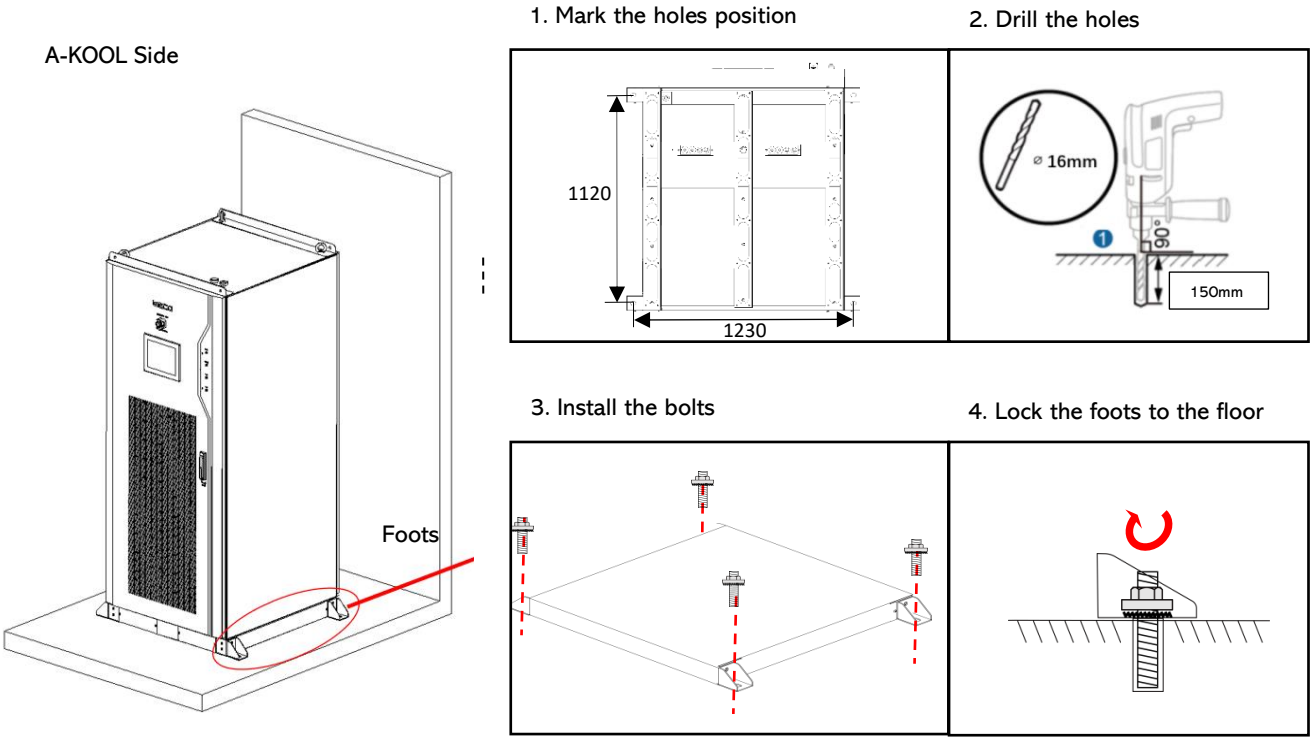

Locking feet can be installed either on the side or in the front of the cabinet, if more cabinet are installed side by side the feet shall be positioned in the front of the cabinet structure

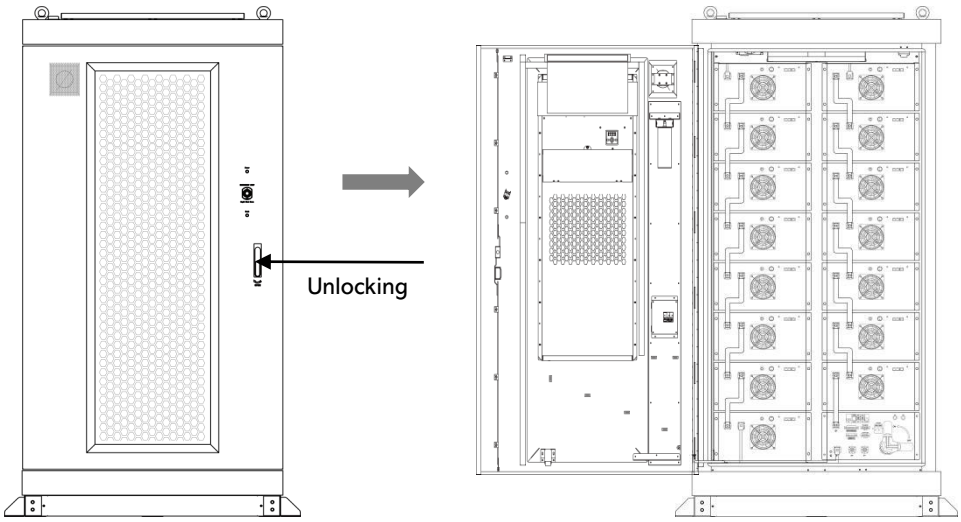

Connect the battery system power output

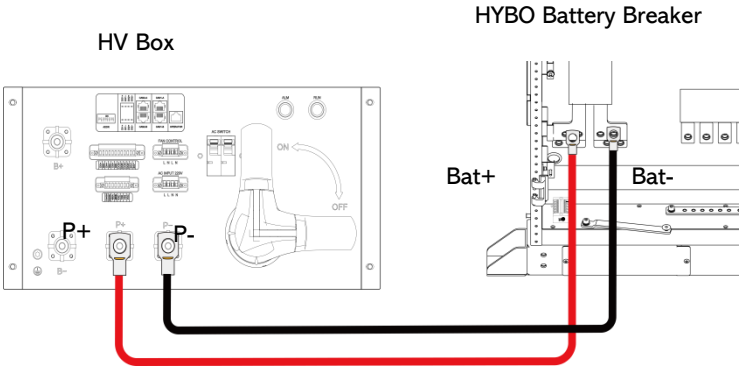

Connection Diagram

Route the power cable+ through the screw of high voltage connector. And connect the cable to the connection pin.

Use a Hydraulic tool to crimp both ends of Power cables.

One end connects to P+ terminal, the other end to the BAT+ of HYBO. Fasten the screw to fix the ends.

One end connects to P- terminal, the other end to the BAT- of HYBO. Fasten the screw to fix the ends.

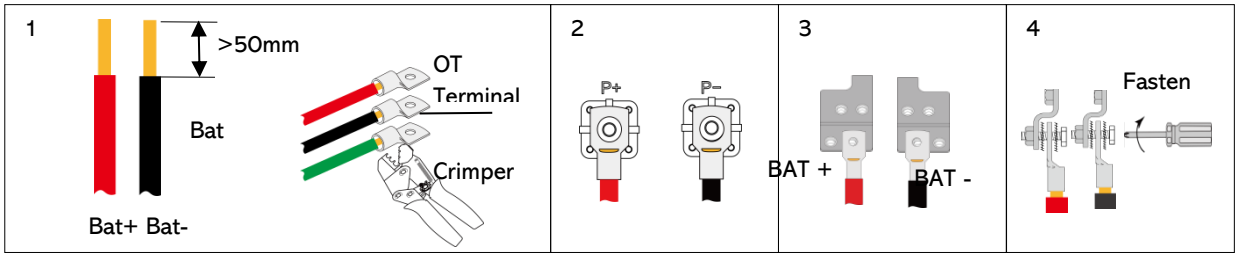

Step 4: Connect A-KOOL 24V signal (valid for Hybo Only)

Connect the 24V + of battery XT4 (6-Pin terminal) to the HVBOX-P24V+.

Connect the 24V - of battery XT4 (6-Pin terminal) to the HVBOX-P24V-.

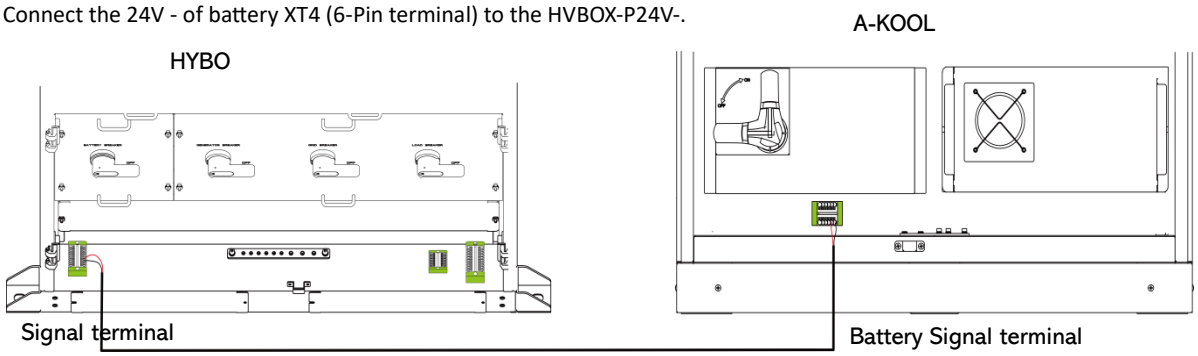

EXT (10-Pin Terminal)

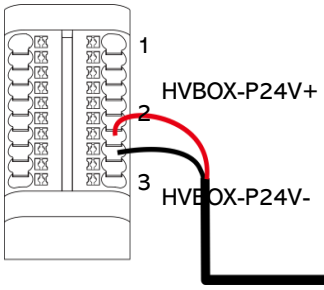

XT4

(6-Pin Terminal)

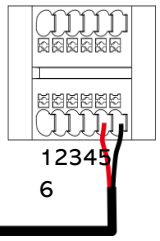

XT4					
1	2	3	4	5	6
E-BAT1-24V+	E-BAT1	E-BAT1-24V-		OUT-24V+	OUT-24V-

Connect A-KOOL CAN communication to the HYBO.

Connect the CAN 2A of Battery HV Box to the CAN BMS port of the HYBO (located on the bottom left of the inverter cabinet).

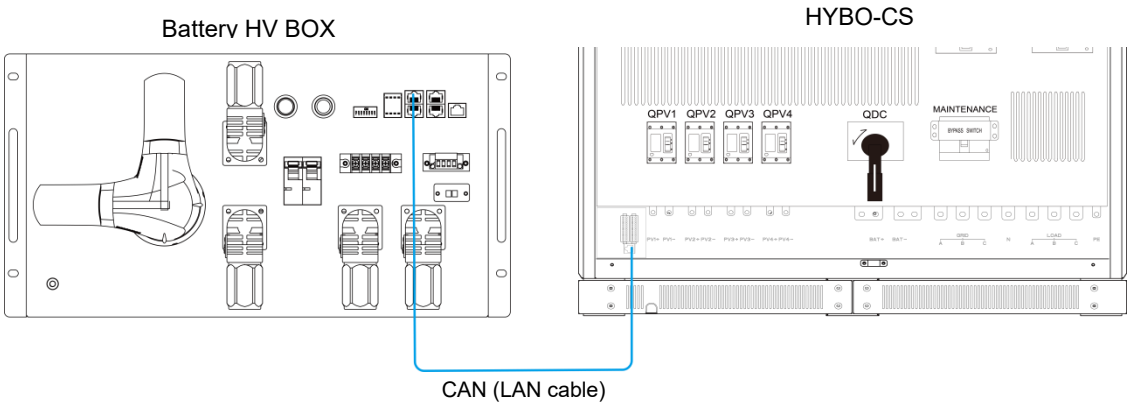

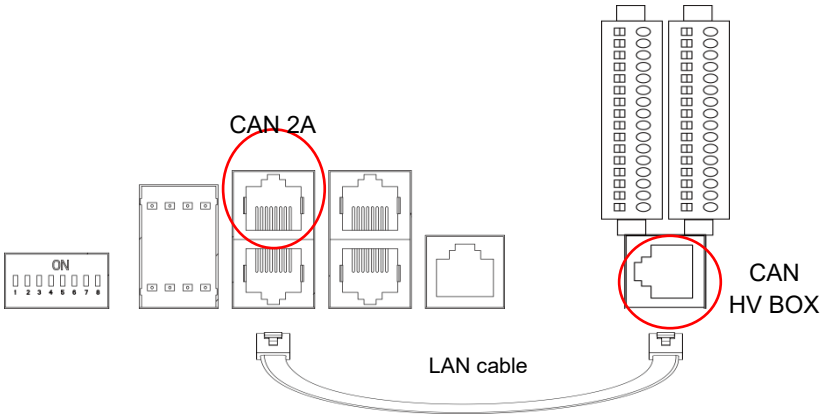

For Firmware 99.02 or higher, please use CAN 2A port for the HV BOX to Inverter communication.

5.3 BATTERY SYSTEM CONNECTIONS

Installing Tools:

Multimeter + current clamp	Insulated screwdriver set	Allen Key Set	Drill + hammer
Electrician's scissors	Insulated torque wrench set	Sling + mechanical lift	RS232/USB）

Personal protective equipment

Mechanical lifting device for module lifting and positioning

Premise

The battery cabinet is delivered fully assembled according to the chosen configuration, the following steps are not required during commissioning but only necessary in case of battery addition or replacement

5.4 Connection of the battery modules to the HV Box

Step by step procedure

Step 1: Prepare the tools. And observe the appearance of the battery module and HV Box module for completeness and shape for obvious damage.

Step 2: Start each battery module and measure the total voltage of the battery module with a multimeter. Confirm that the total voltage of each battery module is greater than 51V, and the voltage difference between modules after 1h relaxation is within 0.25Vdc, then proceed with the subsequent work.

Step 3: Turn off each battery module. Connect the power cables from the battery module to the HV Box module (refer to 5.4.2.2 Schematic for connection).

Step 4: Connect the communication lines between the battery module and the HV Box module and set the dip switches of the HV Box module (refer to 5.4.3.3 for instructions on connecting the communication lines and setting the dip switches).

Step 5: Confirm that the power cable and communication line are connected and the dip switches are correct, turn on the rocker switch of each battery module, and the green indicator lights of the battery modules are all on. Finally, turn on the circuit breaker switch of the HV Box module.

Schematic diagram of the connection between the battery module and the HV Box module

Please note: Drawings are for reference only, please refer to the material.

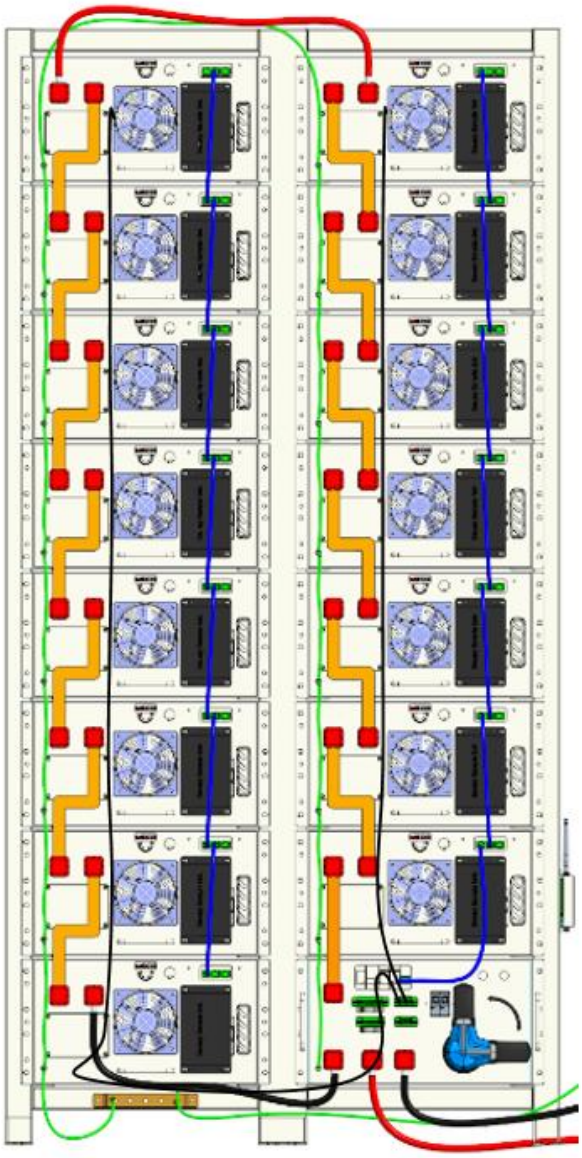

DIP switch setting

5.5 Connection of the battery cluster to the inverter

Steps for connecting a single battery cluster to an inverter

Step 1: Prepare the tools. And observe the shape of the battery module and HV Box module for visible damage.

Step 2: When the HV Box module is not connected to the inverter, verify that the boat switch on the battery module is off and the HV Box module circuit breaker is off. If there are no problems, proceed to the next step.

Step 3: Connect the communication cables and power cables of the control module and the inverter (refer to 5.4.3.2 Schematic for the connection method), set the dip switches correctly, and start the battery module and the control module after confirming the connection is correct.

Schematic diagram of the connection between single cluster battery box and inverter

Please note: Drawings are for reference only, please refer to the material.

The high voltage module single cluster power cable and communication cable can be connected by referring to the following diagram:

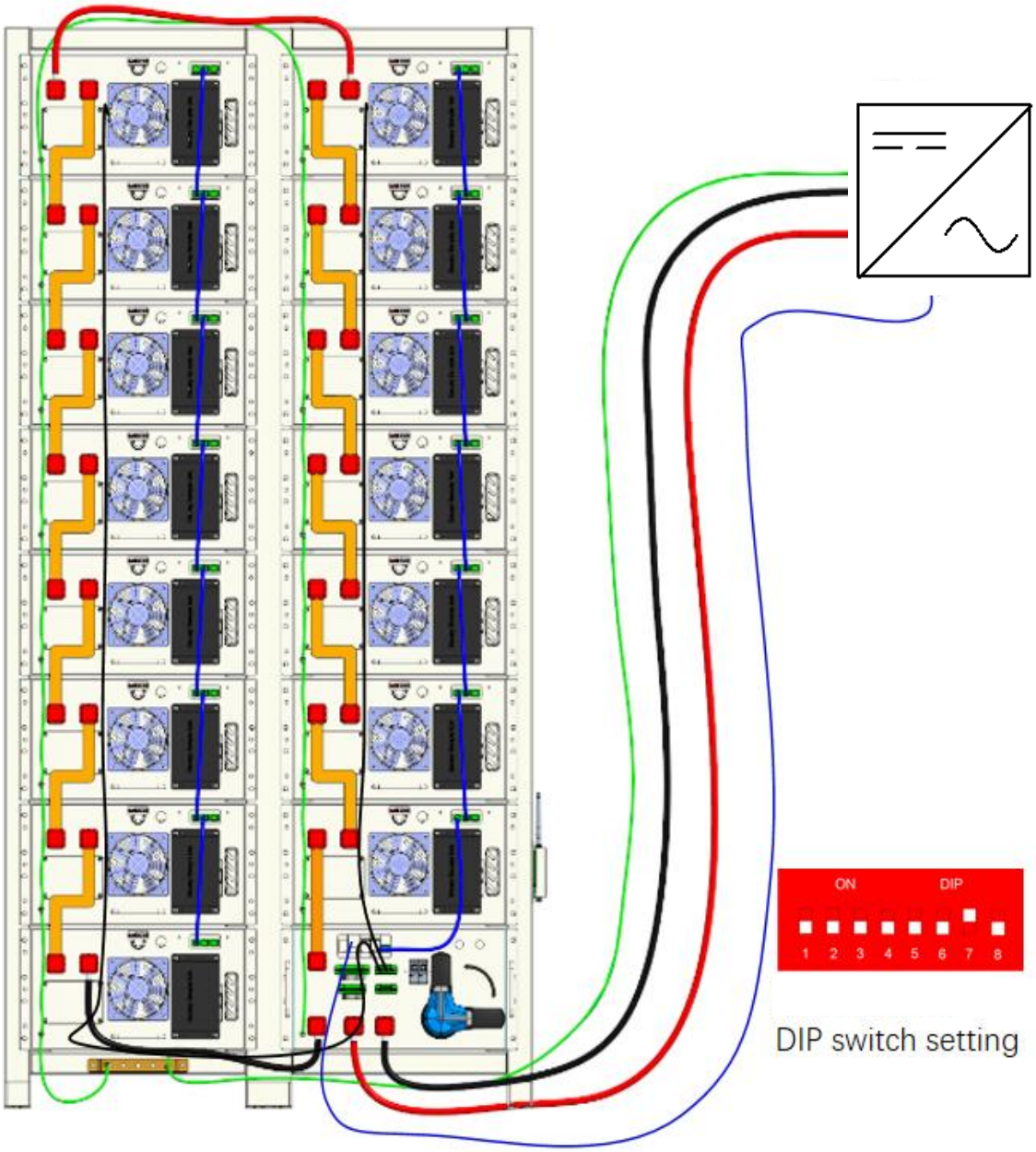

NOTICE: The HV Box module needs to be rebooted after setting the DIP switches, and the settings will not take effect until after the reboot.

5.6 Multi-cluster battery module connected to inverter

Steps for paralleling multi-cluster battery modules

Step 1: Connect the single cluster high voltage module

Step 2: Connect the power cable of the high voltage module

Step 3: Connect the HV Boxes communication line and set the dip switches (refer to 5.4.4.3 for communication line connection and dip switch setting). Turn on the rocker switch of the battery's module, and all the green indicators of the battery module will light up. Finally, turn on the circuit breaker switches of all HV Box modules.

Connection between multicluster high-voltage modules and inverters

Step 1: After the multi-cluster HV modules are connected, turn off all HV modules.

Step 2: Connect the CAN communication line between the HV Box module and the Combiner communication box (refer to 5.4.3.3 for the connection of the communication line), and then connect the communication line between the Combiner communication box and the inverter (refer to 5.4.3.3 for the connection of the power cable).

Step 3: Start the multicluster battery module.

Connection of system power and communication cables

Information: When multiple HV modules are used in parallel, communication between the parallel HV modules, the HV Box module and the Combiner communication box can only be communicated via the CAN interface, communication between the Combiner communication box and the inverter can only be communicated via the CAN interface, communication between the battery modules and communication between the HV Box module and the battery modules can be communicated via CAN.

The inverter can only communicate via the CAN interface, the battery modules communicate with each other via the CAN interface, the HV Box module communicates with the battery module via the CAN interface, and the HV Box module communicates with the HV Box module via the CAN interface.

Note: The following figure is only a communication line connection diagram, the specific interface must be compared with the real thing.

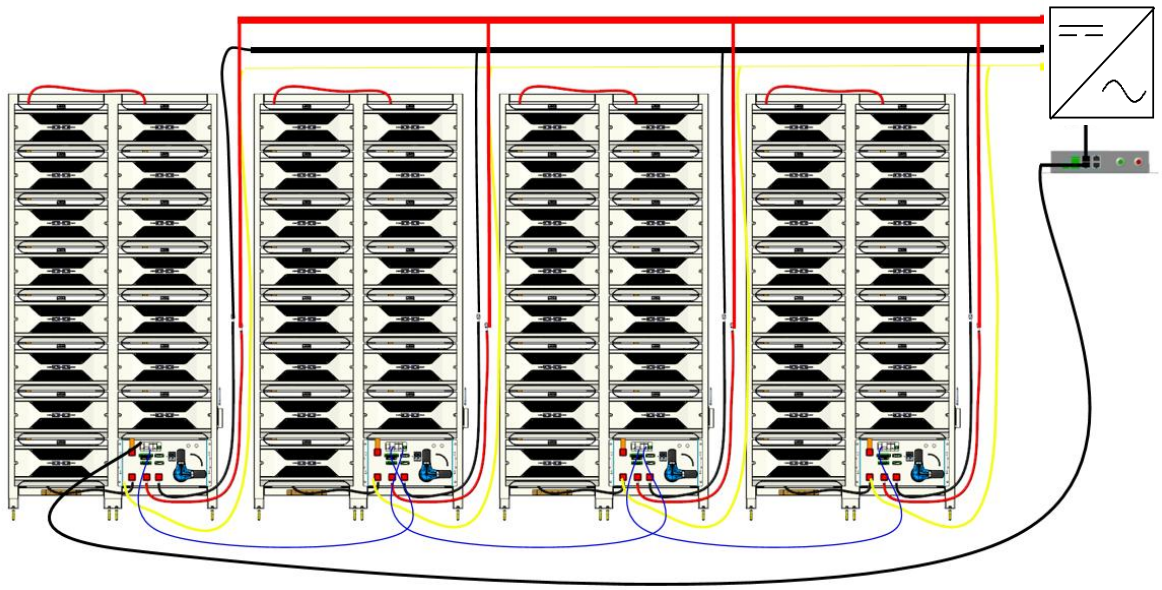

The dipswitch settings are shown below:

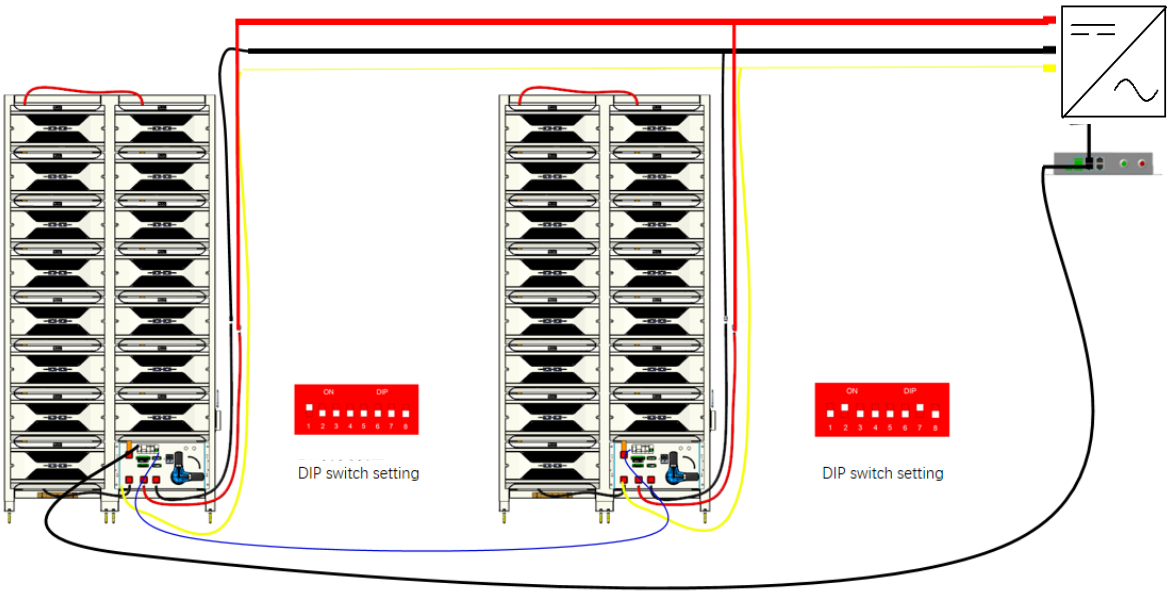

The DIP switch address range for multi-cluster high-voltage systems is: address 1 to address 8.

DIP Switches								Functionality
1	2	3	4	5	6	7	8	
ON	OFF	OFF	OFF	N/C	N/C	ON-with Terminal resistance OFF-no Terminal resistance	N/C	Address 1
OFF	ON	OFF	OFF	N/C	N/C	ON-with Terminal resistance OFF-no Terminal resistance	N/C	Address 2
ON	ON	OFF	OFF	N/C	N/C	ON-with Terminal resistance OFF-no Terminal resistance	N/C	Address 3
OFF	OFF	ON	OFF	N/C	N/C	ON-with Terminal resistance OFF-no Terminal resistance	N/C	Address 4
ON	OFF	ON	OFF	N/C	N/C	ON-with Terminal resistance OFF-no Terminal resistance	N/C	Address 5
OFF	ON	ON	OFF	N/C	N/C	ON-with Terminal resistance OFF-no Terminal resistance	N/C	Address 6
ON	ON	ON	OFF	N/C	N/C	ON-with Terminal resistance OFF-no Terminal resistance	N/C	Address 7
ON	ON	ON	ON	N/C	N/C	ON-with Terminal resistance OFF-no Terminal resistance	N/C	Address 8

Note: When multiple clusters of HV modules are connected in parallel, only position 7 of the last cluster's HV Box DIP switch needs to be ON (the cluster to which the Combiner Communication Box is connected is the first cluster).

5.7 Startup and shutdown of high voltage modules

Single-cluster high-voltage systems

NOTICE：Before using this product, please read this manual carefully for the proper startup and shutdown procedures for each battery configuration.

Start:

1. Confirm that the high voltage system power cable and communication line connections are correct

2. Turn on all rocker switches of the single cluster battery module, turn on the HV BOX Breaker, and the green indicator light will be on;

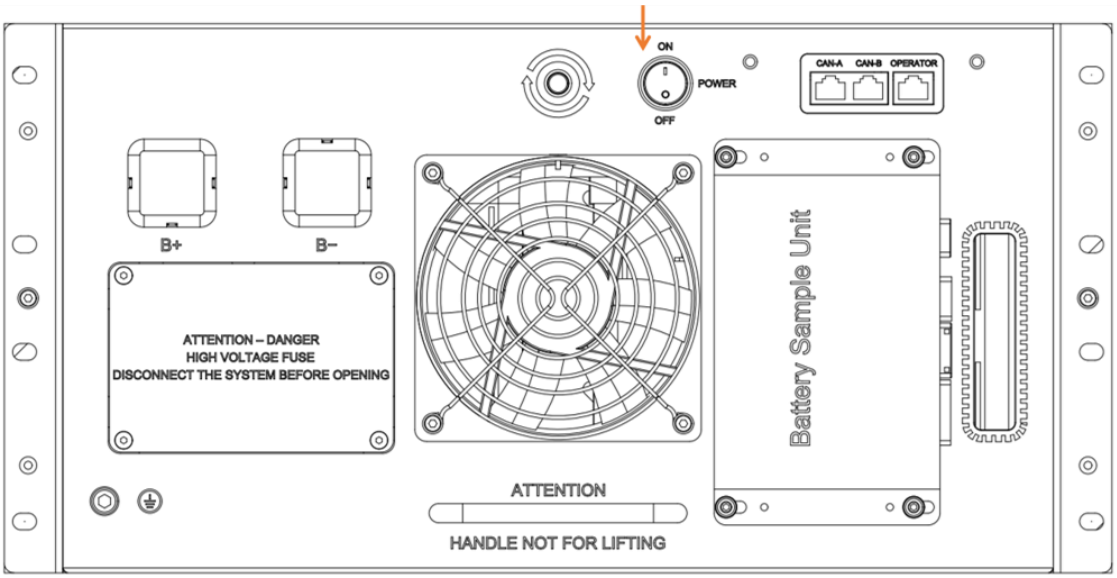

NOTE: It is necessary to check the start-up process and ensure that all green LEDs on the module are constantly on and that the fault LEDs are off.

NOTE: If one or more of the battery modules do not turn on during this process, or if the LEDs are unstable, all modules must be turned off and all connections between ports CAN A and CAN B must be checked.

If any exception occurs during this process, it is necessary to shut down the entire cluster and repeat the process in step 1.

1. Disconnect the HV Box module circuit breaker.

2.Disconnect BMS power by turning off all rocker switches (1=on, 0=off).

Cluster startup

NOTICE： Before using this product, please read this manual carefully for the proper startup and shutdown procedures for each battery configuration.

Start：

Before starting, check whether the power line is connected correctly and the screws are tightened and secure; whether the communication line is connected correctly; and whether the DIP switch is set correctly.

1. Connect the Combiner Communication Box 24V power supply.

2.Turn on all rocker switches for single cluster battery modules (rocker switch ON is on).

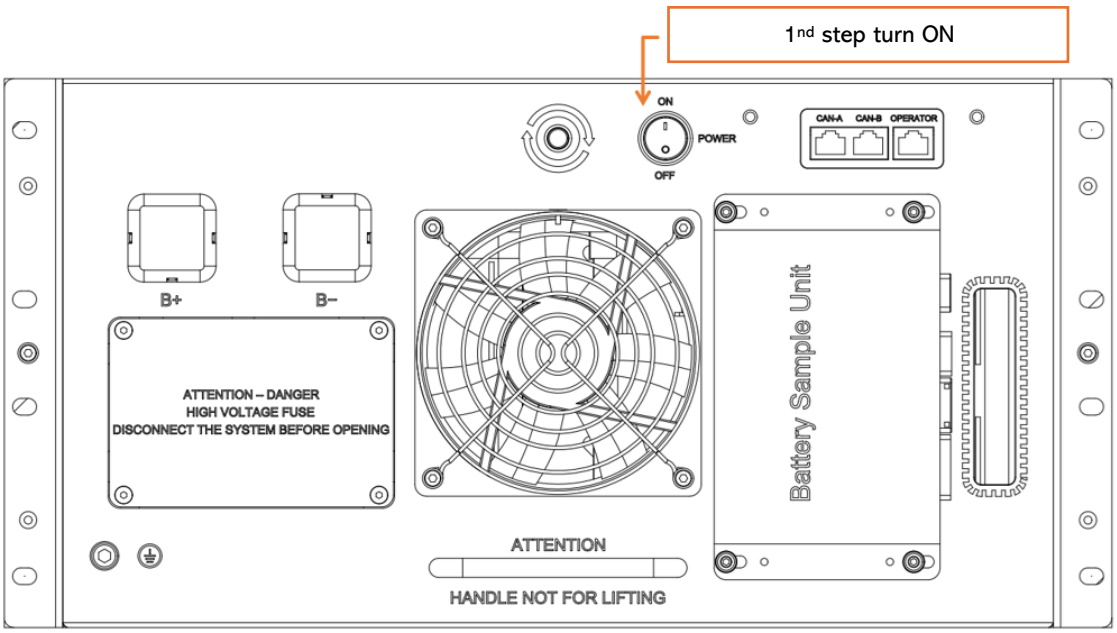

3. Turn on the single cluster HV BOX breaker and the AC circuit breaker.

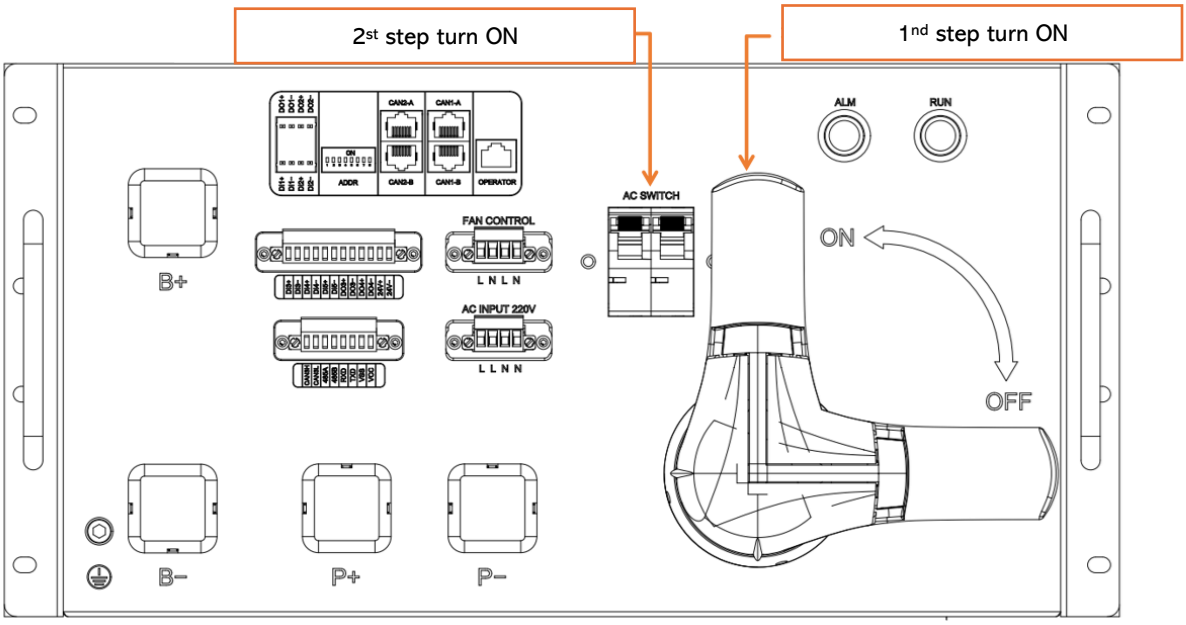

4. Repeat the operation of steps 1 and 2 to start all high voltage clusters.

5. Complete the startup operation.

NOTICE: If any exception occurs during this process, it is necessary to shut down the entire cluster and repeat the process in step 1.

1. Turn off the power to the Can Combiner.

2. Turn off the circuit breaker for all the HV Box modules. Repeat this operation to turn off the circuit breaker for each HV Box module.

3. Turn off all battery module rocker switches and disconnect the BMS power supply (1=on, 0=off).

NOTICE：To completely shut down the cluster, all power to each module must be turned off (boat switch);

5.8 Fault indicator status indication of HV BOX

The fault indicators provide several status indications as described in the table below.

NO.	Fault cause	Symptoms
1	SumVol UV\SumVol OV\CellVol UV\CellVol OV	Light up once in 4s
2	Discharge UT\Discharge OT\Charge UT\Charge OT	Light up twice in 4s
3	Charge OC\Discharge OC	Light up three times in 4s
4	Internal COM\SumVol Err\External COM	Light up four times in 4s
5	External communication fault, emergency stop, PCS sending hibernation command, no actual charging current and low single voltage fault	Light up five times in 4s
6	insulation fault	Light up six times in 4s

6. System Commissioning

Checking before power on
Checking the system installation and connection for long term use and safety power on.
Check the battery system as same as the below checking list requirement, submit the record result.
If the result against to the requirement, please solve the problem until the system meet the requirement.

Checking list

	Requirement Items	Record
Physical Installation	The product and equipment are not deformed or damaged.	
	The cabinet installation is horizontal, vertical, and stable, and the bottom support are stable and reliable.	
	There is enough space around the product installation.	
	The temperature and humidity of the product installation environment meet the requirements.	
	Open and close the door is free from frictions and the door lock works normally	
Electrical connections	Check the output terminals are connected reliably and that the tightening torque meets the requirements.	
	The PE is reliably grounded and meets the grounding requirements.	
	The AC circuit breaker and other breakers are in the "OFF" state.	
	The power cables, signal cables, and communication cables meet the requirements.	
	Measure the voltage of the DC string and ensure that matches the design and the inverter standards	
	The battery voltage is consistent across the modules	
	The safety protections have been verified, reliable, and the warning labels are clear.	
Other	The connecting cable was tied securely with an insulation cable tie.	
	The connection layout same as per the chief engineers design and local regulations.	
	The cable ties are uniform, no cutting sharp edges.	
	There are no tools, parts, conductors, or other foreign objects inside the cabinet.	
	There is no condensation dust, debris or ice in the cabinet.	

Plug MSD connector

MSD connector (MSD means manual service disconnect, high voltage interlock inside.)
Note: Carefully take, put or place the plug to protect the low-voltage pins from bending.

MSD Connector Plug & Socket

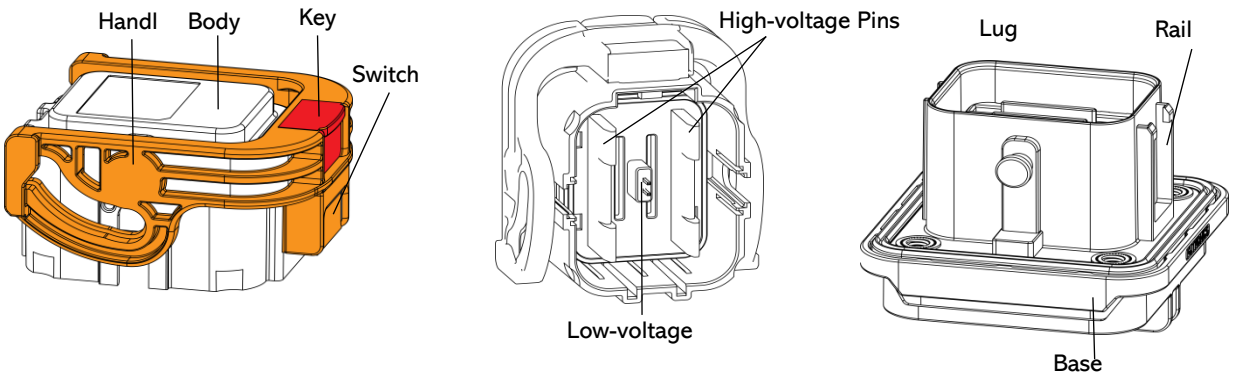

MSD Connector Socket

Installation steps: Get the plug from accessories, open the handle to 90 degrees, align the plug and socket, the handle will change from 90 degrees to level, after hearing a “click” (indicating that the plug is connected well), and then insert the key to lock the handle.

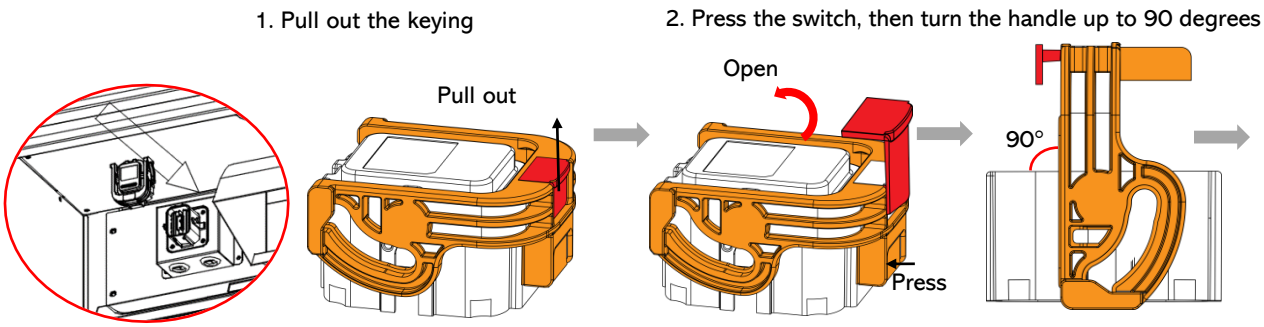

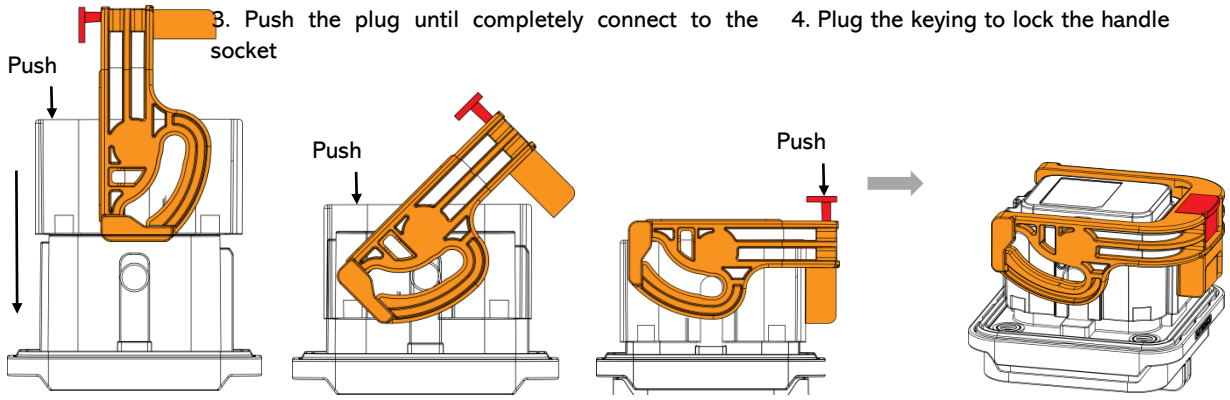

6.1 Power on the system.

Do not power on the system until the checking list finished.
Close the breaker of Air conditioning AC input circuit on the front door.

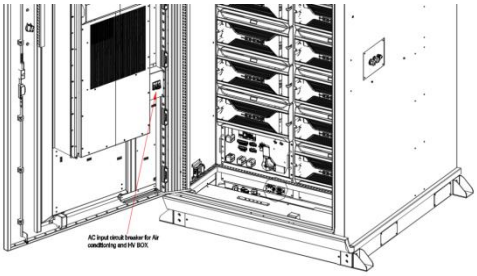

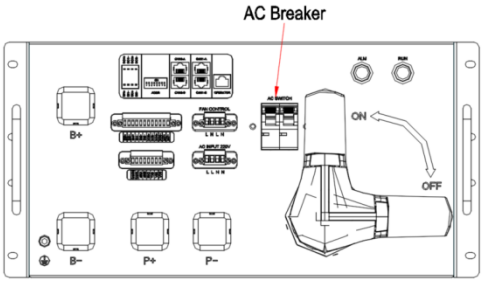

Close the AC input circuit breaker on HV-BOX.

Close the pre stage AC input circuit breaker, after the AC input circuit breaker is closed, the cabinet power-on indicator lights up.

Close the disconnector on the high-voltage box, and after this switch is closed, the battery cabinet starts to work.

Note!

The air conditioning in the cabinet is controlled by the BMS and the parameters have been set, so no additional intervention is required

The cabinet's fire protection system operates independently and is monitored by the BMS and does not require any additional settings.

Note!

In case of an emergency in the cabinet, if the power supply needs to be interrupted urgently, the emergency switch can be pressed and the contactor and AC input switch in the high-voltage box will be disconnected after the emergency switch is pressed.

After clearing the abnormality, if the system needs to be turned on again, turn the emergency switch and lift it, then close breaker and the system will be turned on again.

If there is no fault, do not press the emergency stop button.

If the cabinet will exceed the allowed limits it will enter in blocked mode and a local intervention will be required by a WeCo authorized installer to verify the system and to identify the root cause

6.2 Power off the system

Important information

Warning!

After the battery cabinet is powered off, there is still residual power and heat in the chassis, which may cause electric shock or burns. Therefore, after the battery cabinet is powered off for 10 minutes, wear protective gloves and operate the battery cabinet.

Procedure

Step 1. Turn off other devices connected to the battery cabinet and make sure that the battery cabinet is not charged and discharged.
Step 2. Move the isolation switch on the high voltage box in the battery cabinet to the OFF position.
Step 3. Disconnect the battery cabinet from the AC grid's circuit breaker.
Step 4. If the battery cabinet needs to be powered off for a long time, disconnect the service switch on the battery cabinet.

6.3 System Maintenance

Routine Maintenance is compulsory for safety and reliability of the system

To ensure that the battery cabinet can operate well for a long time, it is recommended to perform routine maintenance as described in this manual and contracting with a specialized company for after sales maintenance contract to perform annual and semi annual inspections.

Caution!

Perform system power-down operations during maintenance such as system cleaning, electrical connections, grounding reliability, et

6.4 Maintaing list

Referer to the initial part of this manual for detailed Guide Lines.

Refer to the warranty document all the compulsory action to be implemented to benefit of the warranty

Check the contents	Checking the method	Maintenance intervals
System cleaning	Regularly inspect the cabinet for dirty and dust	3 to 6 months
External Check	Observe whether the appearance of the battery cabinet is damaged or deformed.	1 time every six months.
Electrical connections	Check whether the cable connection is falling off or loose. Check the cable for damage, paying particular attention to the skin of the cable in contact with the metal surface to check for any cuts. Check the function of the Inner contactor and the manual breaker, Check the A/C power supply	Three months after the first commissioning, then 1 time every six months.
Ground reliability	Check that the grounding cable is securely grounded.	Six months after the first commissioning, then 1 time every six months to one year.
Battery capacity	If the battery cabinet is less than 5% SOC, the battery cabinet must be charged within 5 days, otherwise it may fall under the minimum voltage and enter in open circuit status	Every day via APP.

7. Disposal of battery cabinets

7.1 Dismantling the battery cabinet

Procedure

Step 1. Perform the system power-off operation (see 6.3 System Power-off).

Step 2. Disconnect all electrical connections to the battery cabinet, including the battery output cable, AC input cable, and protective ground wire.

Step 3. Remove the battery cabinet screws.

Contact a specialized company for removal and transportation

7.2 Packing the battery cabinet

If you also have the original packaging of the battery cabinet, pack it inside the original packaging and tape the package securely

If you can no longer find the original packaging of the battery cabinet, please use a wooden case suitable for the weight and size of this battery cabinet to seal it securely.

7.3 Scrapped Battery Cabinets

At the end of the battery cabinet's design life, the internal battery pack must be properly disposed of by a certified professional company.

Other parts should be disposed of according to local e-waste regulations

Fire suppression system shall disposed according with the regulations

A/C gas and Oil shall be extracted by an authorized company before disposing the A/C compressor